Microwave Development Laboratories

COMPONENTS CATALOG

The future of waveguide component technology

President's Message

In choosing a company to design and manufacture your standard or complex waveguide components, there are only three criteria: experience, quality and service. It is no coincidence that these attributes are MDL's mission in the industry. We have been a manufacturer of the highest quality waveguide components for over 50 years. The fact that we have grown into one of the largest waveguide components manufacturers in the world is testament enough to quality. However, what makes our products unique is less tangible. Of course, state of the art software, machines, and foundry equipment help. But the people who design our components and operate our equipment – professionals who have worked together with us for more than 30 years – provide a level of expertise and ingenuity you won't find walking our competitors' halls. That's why customers choose MDL.

Gordon Riblet

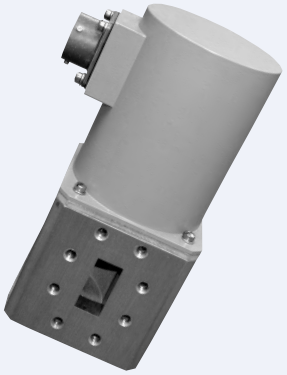

Total Control for Total Perfection.

Great ideas, great solutions, come from great engineering minds, and we have some of the best in the industry. By providing our engineers with state of the art manufacturing and testing facilities under the same roof, they can watch their designs come to life and control every aspect of their project's development to perfection. And you, as a customer, are welcome to collaborate with them every step of the way.

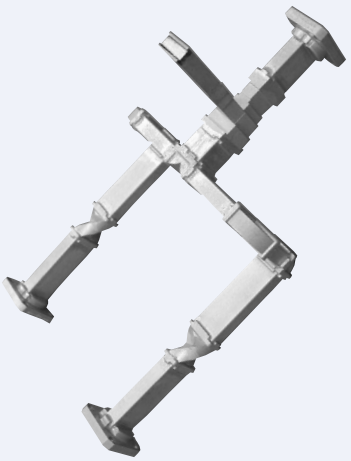

Engineering Capabilities.

Meeting today's design challenges not only requires expertise, but top shelf hardware and software as well. It has been our policy since our founding to equip our engineers and machinists with the finest tools available. Aside from employing proprietary MDL software, our computerized design systems also utilize Solid Works and Ansoft HFSS capabilities. Using Solid Works we first design a 3D model then Ansoft HFSS computes s-parameters and full wave fields, analyzes port impedances, complex propagation constants, electromagnetic fields, and radiated electric fields for open boundary problems, exporting the data for use in linear and non-linear circuit simulations. The beauty of the Ansoft system lies not only in its functionality, but in its speed, allowing us to turn your design challenges into real solutions quickly.

Quality Manufacturing Capabilities.

MDL's in-house manufacturing facility encompasses CNC machining centers, aluminum dip brazing, EDM facilities, cleaning, impregnation, iridite, heat treating, RF testing, and finishing. Off the shelf items, as well as custom pieces that require special tolerances, complicated configurations, multiple formed bends, twists, or offsets are manufactured with precision, and are subjected to complete inspection and testing.

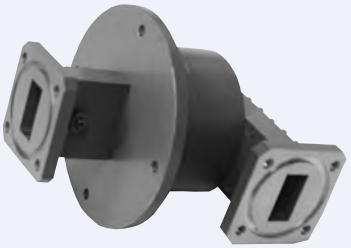

Reliability Guaranteed.

All MDL products undergo 100% functional performance verification as required per ISO 9000. Fully automated, software controlled and networked RF test stations are used throughout our facility. Our test capabilities (DC to 40GHz) encompass VSWR, loss, attenuation, delay, and phase matching. Data collection and product traceability are available to support your needs, and performance criteria are always tailored to meet your most stringent requirements.

In Partnership with our Customers.

Over a span of more than 50 years, MDL has honed itself into a company driven by its customers' needs. From a single custom piece to off-the-shelf items, to mass production runs, we are here to work with you to provide the expertise and quality assurance your project deserves, at a very competitive price. Call us today to speak with an MDL sales representative, and join the future of waveguide component technology.

Plant.

50,000 square foot sales, administrative, engineering and manufacturing facility located in Needham Heights, Massachusetts.

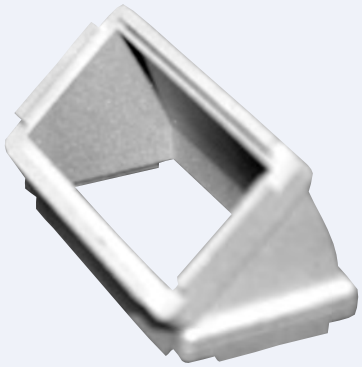

A History of Tomorrows.

When we pioneered the Riblet Coupler back in 1948, we had a pretty good idea that microwave technology was the coming thing. As a result, we've never stopped inventing, testing, and perfecting microwave coupling solutions.

During the '60s, we came up with the thin wall monopulse comparator for the Lunar Excursion Module. The '70s saw us developing waveguide feed and monopulse networks for F-14 and F-15 aircraft. As related technologies expanded, we shrank the size of our products to accommodate them. In the 1980s, we introduced internally milled technology to reduce the size and weight and improve the performance of our products for the F-18 and B-1 radar systems.

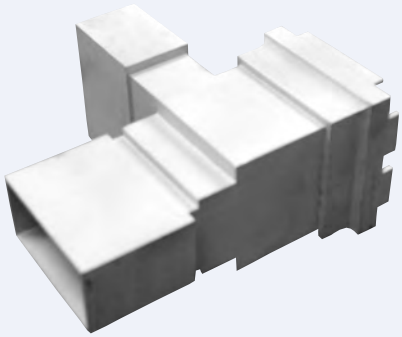

We anticipated today's demands for smaller, more precise waveguide products, such as Longbow and Milstar programs for higher frequencies, as well as shorter lead times and more cost-effective solutions.

Tomorrow, we envision the explosion in microwave technology touching the lives of countless millions of end users around the world. Foresight has made us the world's largest independent producer of waveguide components and subassemblies in the industry.

We will continue to make history.

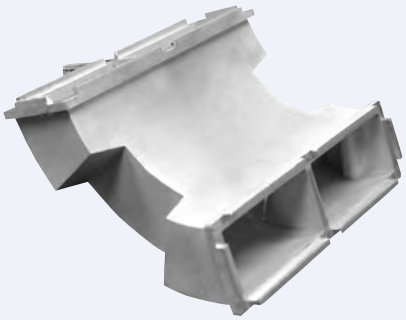

Custom Designs

1 Polarizing Networks are custom designed to your requirements. These networks are available in WR28, 42, 51, 62, 75, 90, 112, 137 and 284. Vertical or horizontal linear polarization and right or left hand circular polarization are options along with circular or square outputs.

2 Transmit receive integrated front end using MDL circulatory isolator, couplers, filters, adapters and loads

3 Reduced height 24 waveguide power divider. Equal phase, unequal power.

4 WR137 Filter Tray Assembly.

5 WR62 Switching Network.

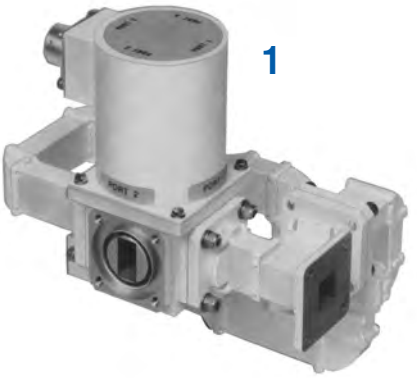

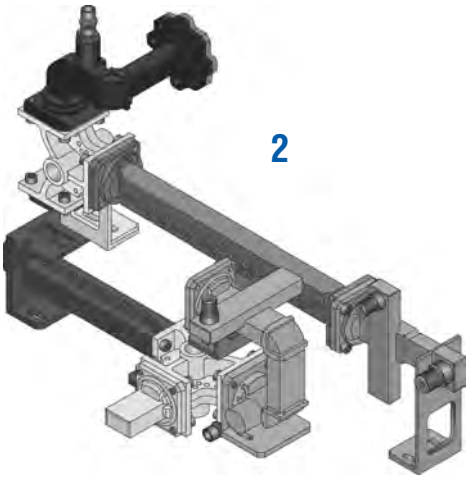

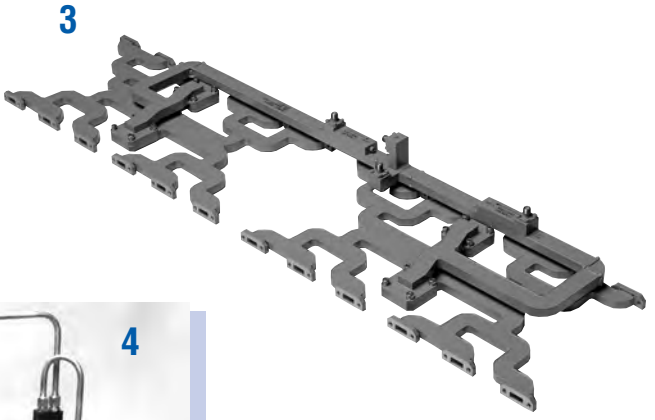

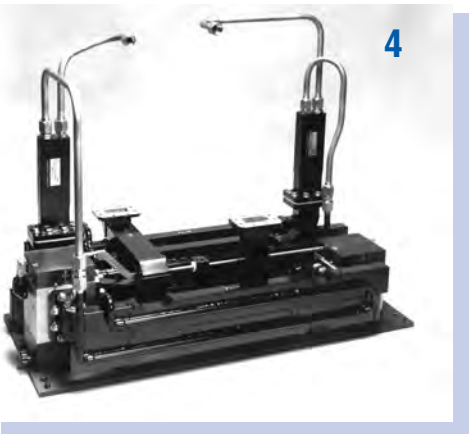

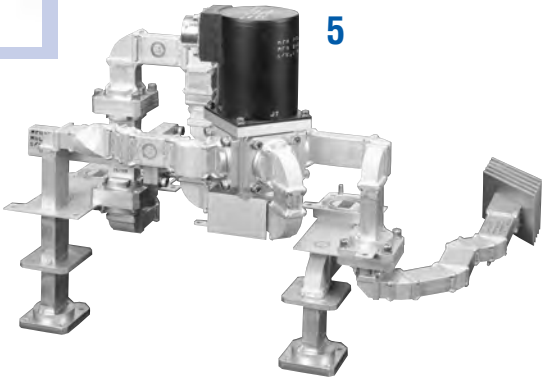

Custom Designs

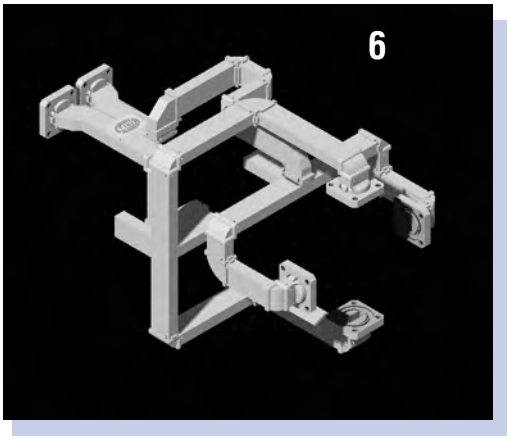

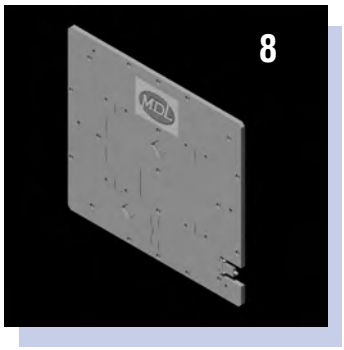

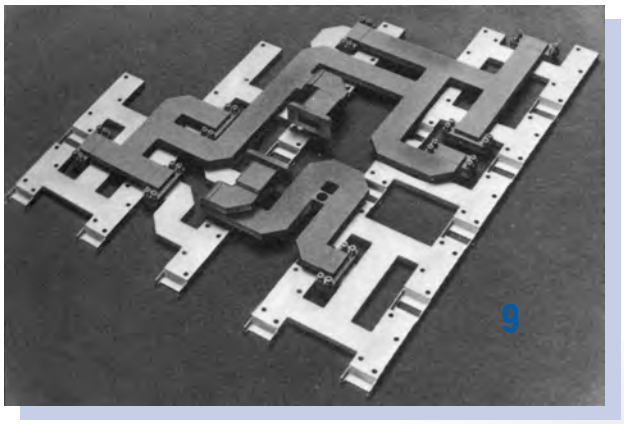

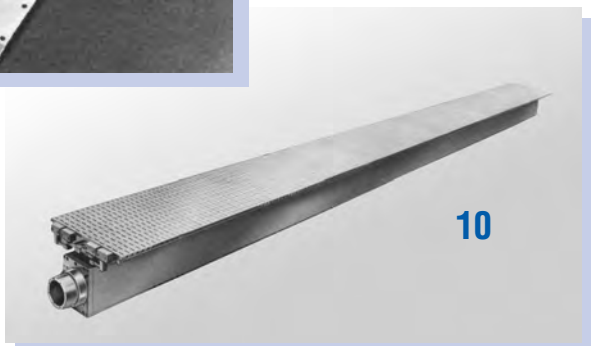

6 Basic design of WR42 four port feed uses cast bends, magic tees and hybrid assembly.

7 The WR62 assembly is a lightweight monopulse duplexer package that includes a four-port feed comparator with sum, difference, and AFC mixers and a sideband generator.

8 Reduced height WR62 power combiner.

9 This WR90 reduced height 20-way power machined from solid stock, has a wall thickness of .030 inch.

10 WR62 Array Assembly consisting of 6 panels 12" x 24" Flat Within .10 Inch.

MDL's special capabilities in designing and manufacturing waveguide components and subassemblies make possible unique packages that meet the most exacting specifications.

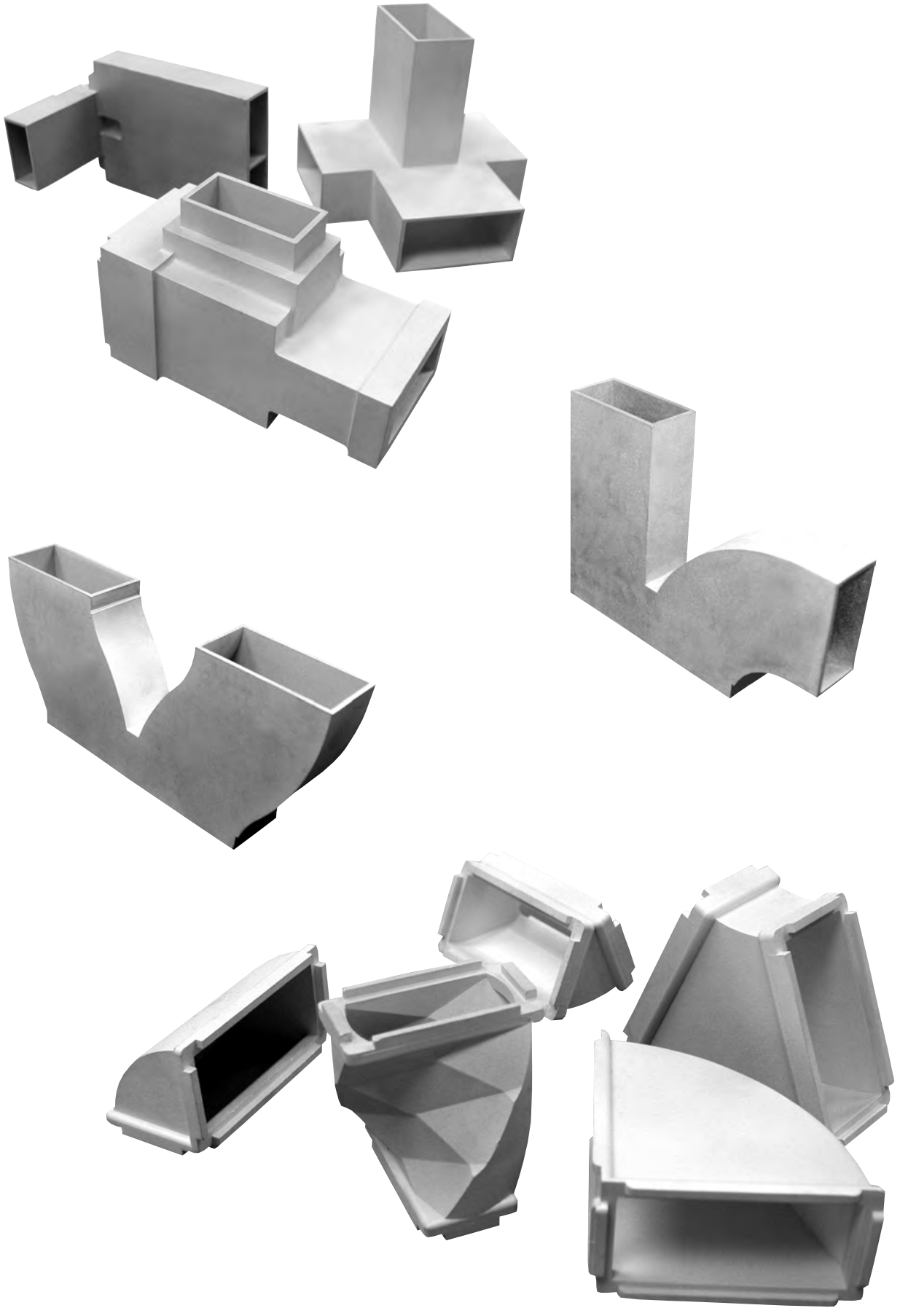

Ordering Information*

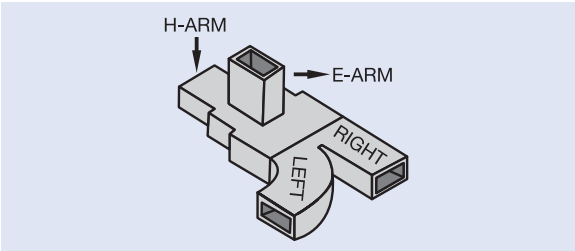

Example: 90TH52-1-A-20P

MODEL NUMBER	FLANGE	MATERIAL	PRESSURE
90TH52	1	A	20P

Flange Termination - 2 Flanges

Flange	Port 1	Port 2
1	Cover	Cover
2	Cover	Choke
3	Choke	Cover
4	Choke	Choke

Material and Finish

Code	Material	Finish
A	Aluminum Alloy D712 in accordance with ASTM B-26	No Finish
B	Copper Alloy C82500 in accordance with Federal spec QQ-C-390	No Finish
C*	Aluminum Alloy	Chromated
D*	Copper Alloy	Silver Plated
E*	Aluminum Alloy	Chromated and Painted Blue
F*	Copper Alloy	Silver Plated and Painted Blue
S	Silicon Bronze Alloy S87200 in accordance with Federal spec QQC-390	No Finish

**Combinations available only where no further solder is required.*

Pressurized for 20PSIG.
Number indicates desired pressure

For non-pressurized, omit numerals and "P".

** MDL reserves the right to discontinue or change specifications without notice.*

Section 2

Monopulse Antenna Feed Comparators

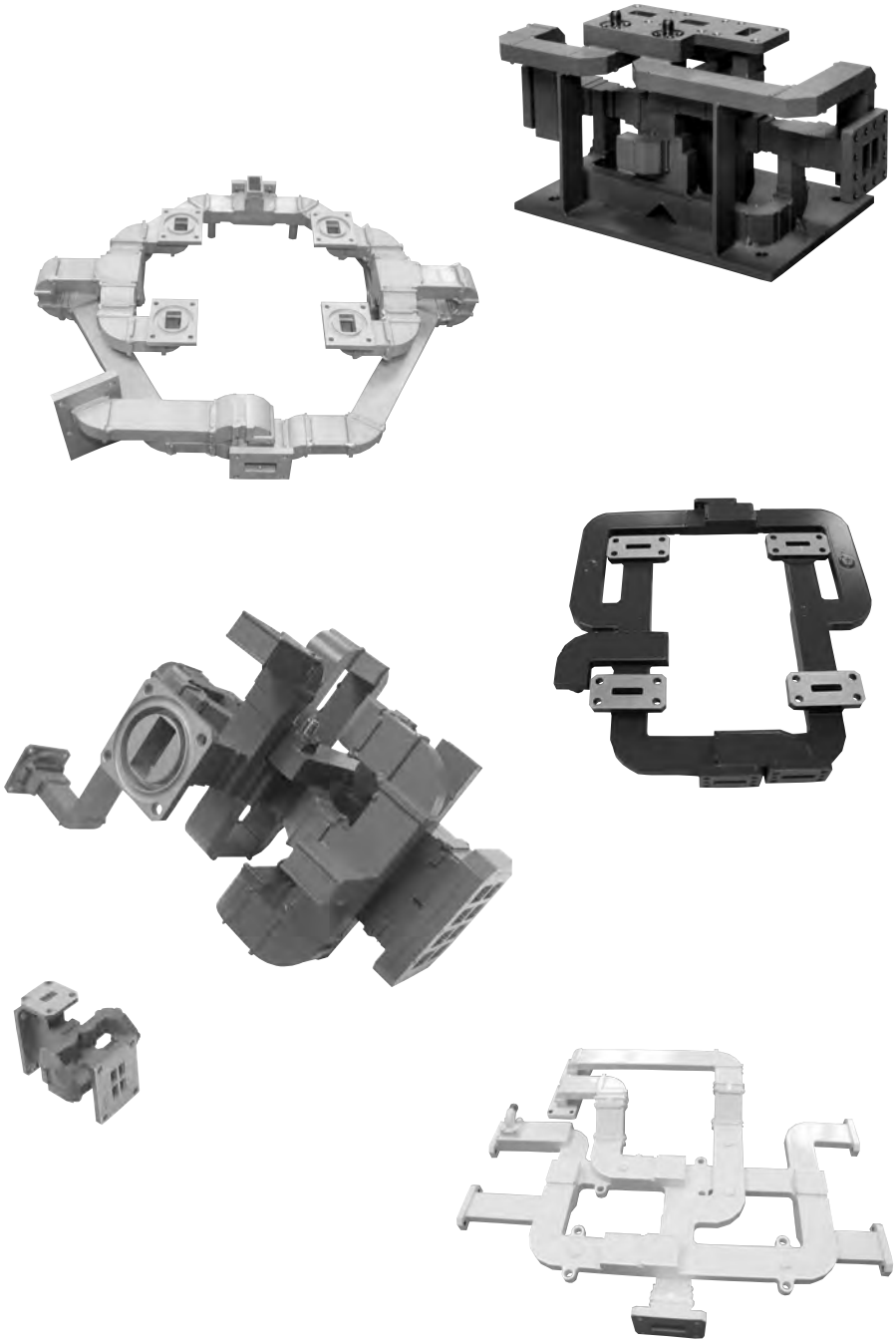

Introduction

MDL monopulse antenna feed comparators are designed from proven stock components, and provide excellent phase and amplitude control to ensure deep nulls and minimal boresight shift with frequency. Dual polarization monopulses employing orthogonal transducers in conjunction with hybrid networks are available. This unique design permits the use of both horizontal and vertical polarization in any antenna feed system. Matching polarizers to generate circular polarization are also available on request. Just a few typical designs of the many monopulse antenna feed comparators available are described here. MDL is ready to quote on custom-designing monopulse antenna feed comparators to meet your special requirements.

Custom Design Monopulses

1 WR51 Monopulse Comparator consisting of MDL standard castings and customized components.

2 The WR187 comparator is used in a circularly polarized system and is assembled from heavy-wall stock components.

3 The WR90 circularly-polarized comparator weights approximately 1 pound. It includes a transmit, a sum, and two different channels.

4 Eight port Monopulse assembly with bit coupler and pressure window.

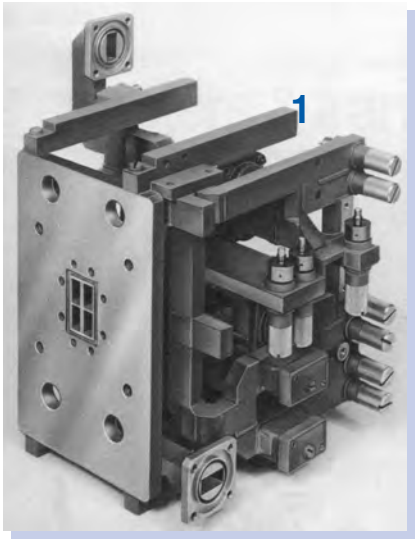

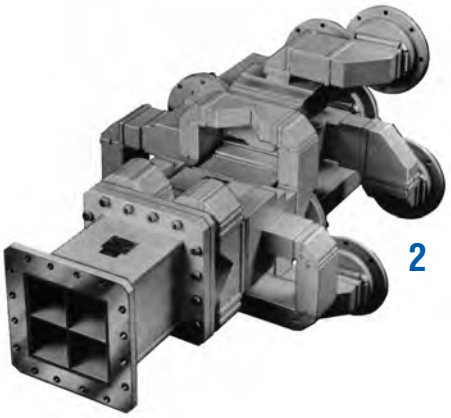

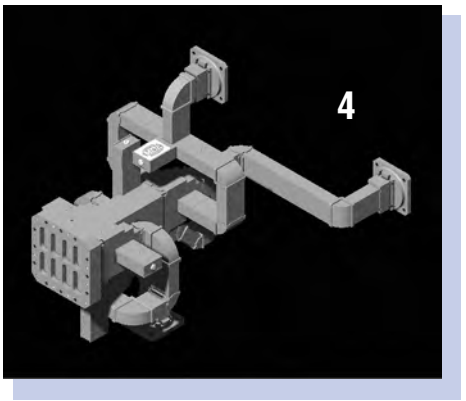

Custom Design Flat Plate Monopulses

Custom Flat Plate comparators available from WR28 through WR90 in full and reduced height waveguide sizes.

These flat plate comparators are usually manufactured by machining the waveguide paths into a solid plate and then dipbrazing a cover on. By using this technique one can maintain better mechanical and electrical specifications. MDL has a plethora of designs of these tees, bends, hybrids etc. that we can transpose into cad format which allows these comparators to be readily machined into solid plates with extreme accuracy

Our customers only have to give our engineer the input/output locations and the desired RF performance. Our engineers will mechanically design the monopulse using the latest Solid Works 3D modeling. Then they will analyze the RF circuit using Ansoft HSFF Version 9 and Optimetrics/Parametrics software. All Design, manufacturing and testing will be performed inhouse.

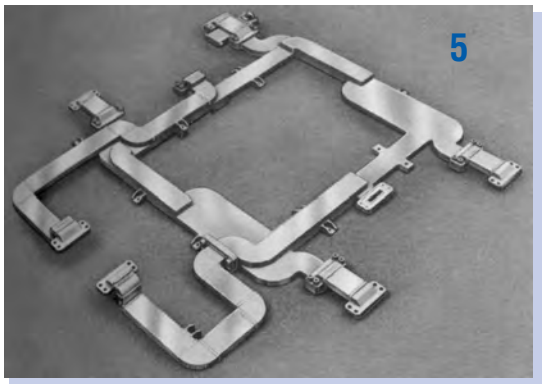

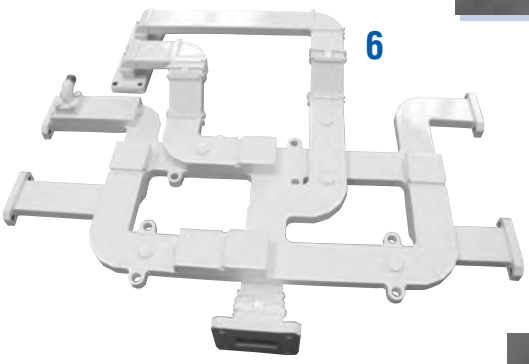

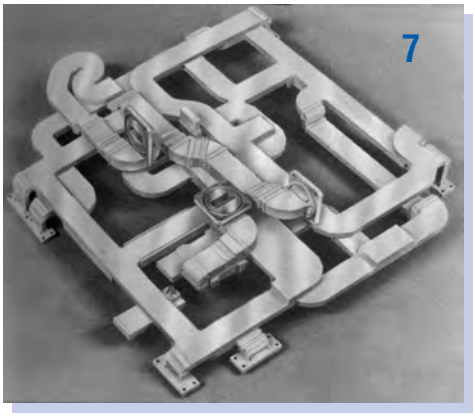

5 Internally milled, this reduced height comparator can be phase-controlled from piece to piece to give equal phase to±3 degrees or better.

6 Reduced Height Custom Comparator

7 Basic design of a half-height WR90 Monopulse Comparator machined from a solid aluminum plate and dip-brazed with assembly of waveguide hybrid junctions, directional couplers, waveguide E and H and flanges.

8 WR51 reduced height custom comparator using N/C machine technology.

Monopulse Comparators

Standard

W/G SIZE	OPERATING FREQ. (GHz)	MODEL NUMBER	MAXIMUM VSWR SUM ARM	DIFF. ARM1	DIFF. ARM2	MIN. INPUT ISOL dB	MAX. OUTPUT POWER UNBALANCE dB	MAX. OUTPUT PHASE ERROR (SUM)*	MAX. OUTPUT PHASE ERROR (DIFF.)**	OUTPUT PHASE VAR. VS. FREQ.
Single Polarization										
WR28	30.0-32.0	28CM26	1.30	1.50	1.40	30	0.25	4°	4°	2.5°
	33.0-34.0		1.40	1.50	1.55	30	0.25	4°	4°	2.5°
	34.0-36.0	28CM16	1.35	1.50	1.45	30	0.25	4°	4°	2.5°
	34.0-36.0	28CM36	1.30	1.50	1.40	30	0.25	4°	4°	2.5°
	36.0-38.0	28CM46	1.50	1.65	1.65	32	0.35	5°	4°	2.5°
WR42	23.0-24.0	42CM16	1.25	1.50	1.35	30	0.25	4°	4°	2°
	20.0-21.0		1.25	1.25	1.25	32	0.15	3°	2°	2°
	21.0-22.0	42CM26	1.40	1.30	1.50	35	0.25	4°	4°	2°
WR51	15.8-17.0	51CM16	1.15	1.25	1.25	40	0.15	3°	2°	1°
WR62	15.5-17.0	62CM16	1.25	1.35	1.35	35	0.15	3°	3°	2°
	15.2-17.2	62CM26	1.40	1.50	1.50	30	0.20	3°	3°	3°
	13.0-14.8		1.30	1.35	1.35	35	0.20	3°	3°	3°
	14.8-15.2	62CM36	1.30	1.35	1.50	35	0.20	3°	3°	3°
WR90	8.5-9.6	90CM26	1.15	1.25	1.25	40	0.10	3°	2°	1°
	8.5-9.6	90CM46	1.15	1.25	1.25	40	0.10	3°	2°	1°
WR112	7.1-8.5	112CM36	1.20	1.50	1.50	40	0.10	3°	2°	1°
	7.35-8.3	112CM46	1.20	1.50	1.50	40	0.10	3°	2°	1°
	7.5-8.5	112CM16	1.15	1.20	1.20	40	0.10	3°	2°	1°
	7.5-8.4	112CM26	1.25	1.25	1.25	40	0.10	3°	2°	1°
WR137	5.4-5.9	137CM26	1.15	1.20	1.20	35	0.10	3.5°	1.5°	1°
WR187	5.4-5.9	187CM16	1.15	1.20	1.20	35	0.10	3.5°	1.5°	1°
	5.4-5.9	187CM26	1.40	1.40	1.40	30	0.10	6°	4°	2°
WR284	2.7-3.15	284CM16	1.25	1.35	1.35	35	0.10	3°	2°	1°
Dual Polarization										
WR90	8.5-9.6	90CM66	1.30	1.25	1.25	40	0.10	3°	2°	1°
WR187	5.4-5.9	187CM36	1.40	1.30	1.30	35	0.15	3°	2°	2°

**Between any two adjacent output ports that comprise a sum pattern.*

***Between any two adjacent output ports that comprise a difference pattern.*

Monopulse Comparators

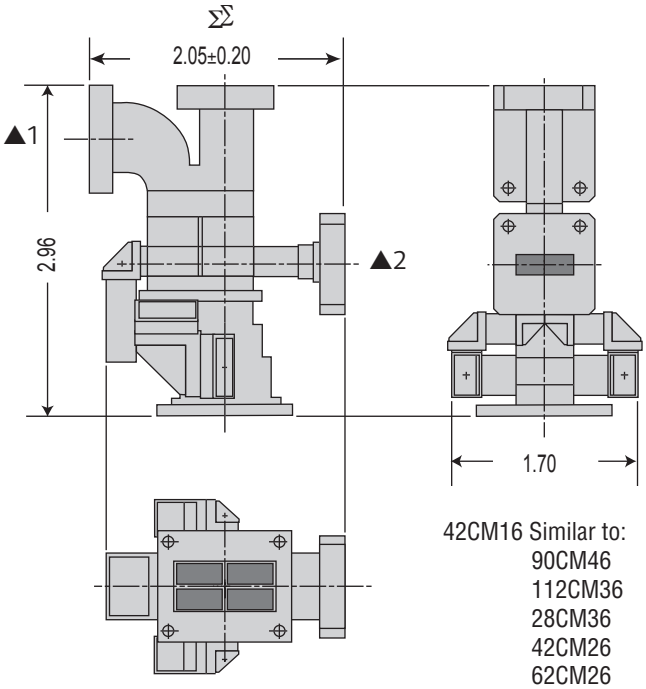

42CM16 Similar to:
90CM46
112CM36
28CM36
42CM26
62CM26

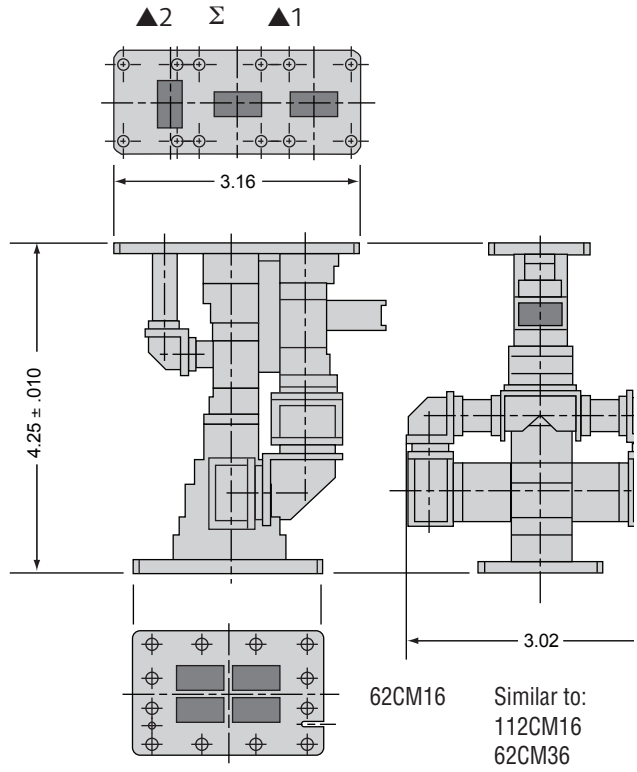

62CM16 Similar to:
112CM16
62CM36
28CM16
28CM26

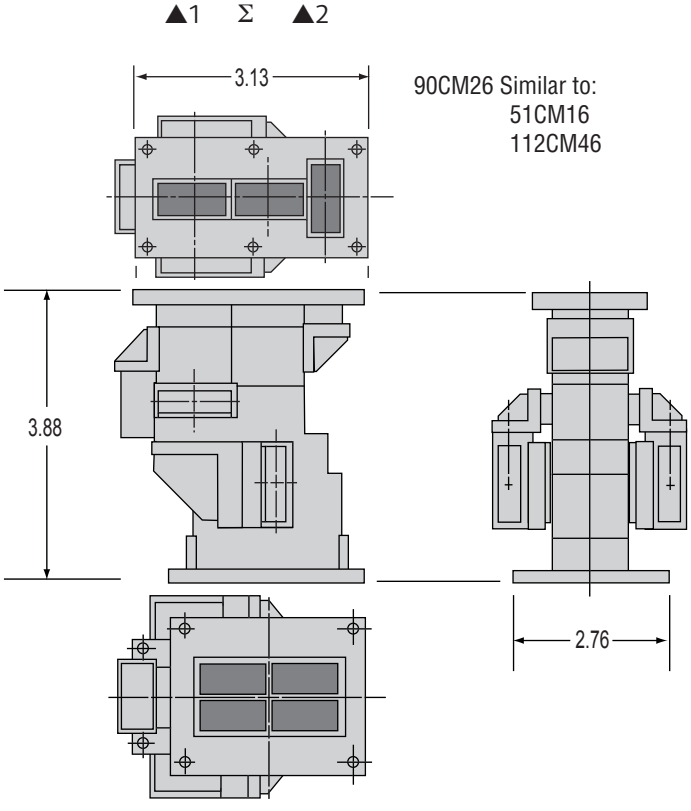

90CM26 Similar to:
51CM16
112CM46

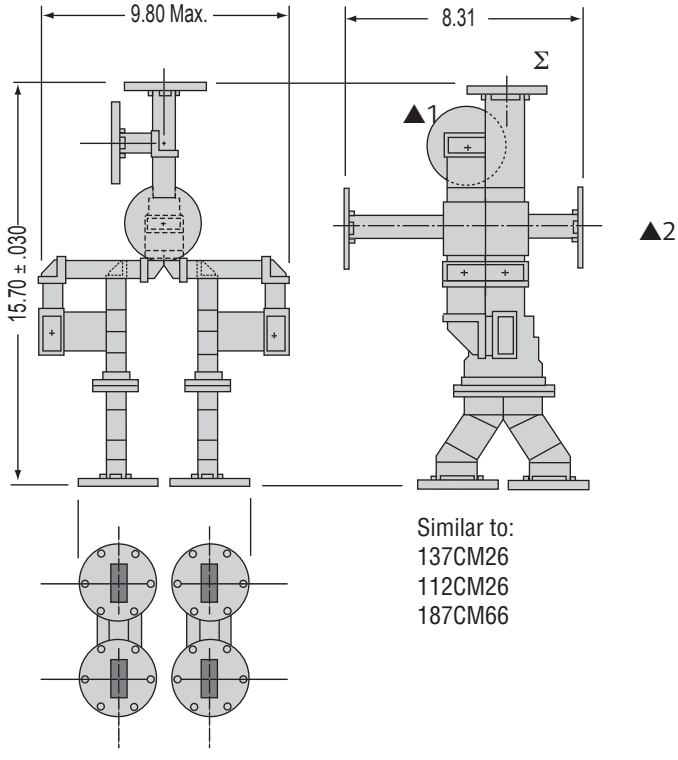

Similar to:
137CM26
112CM26
187CM66

Monopulse Comparators

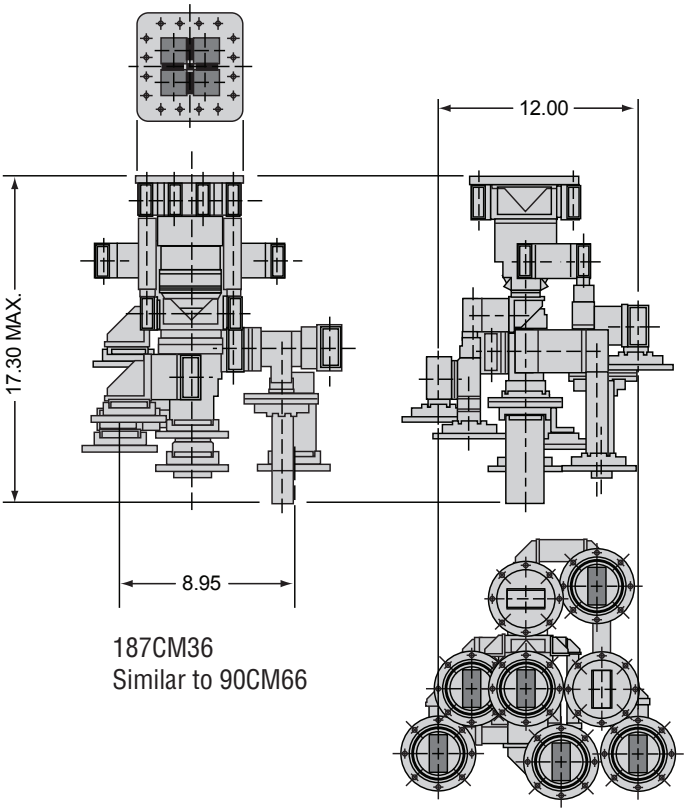

187CM36
Similar to 90CM66

Section 3

Rotary Joints

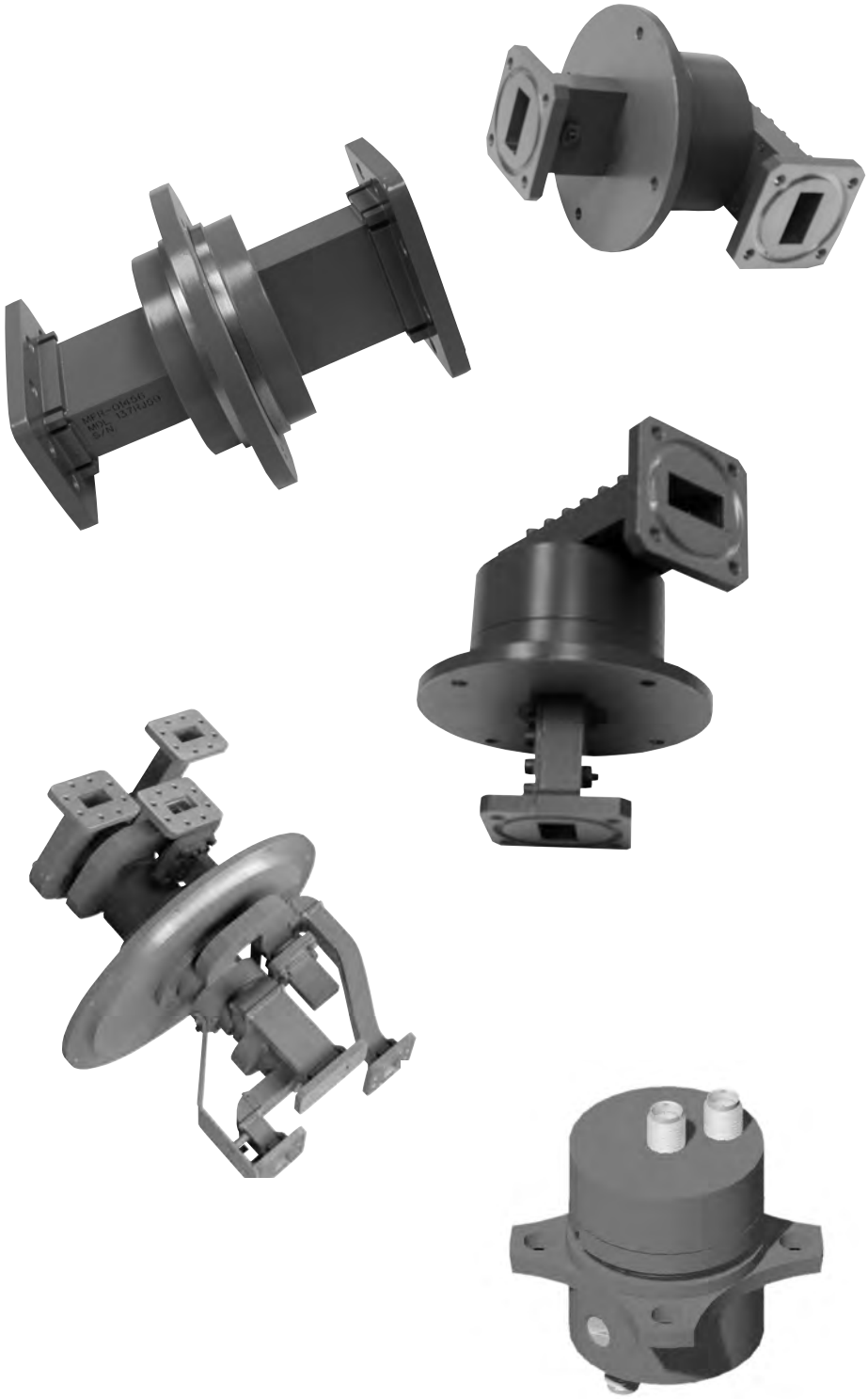

Introduction

For more than forty years, MDL has produced waveguide rotary joints and is one of the major suppliers in both domestic and overseas markets. Many of the larger military systems use custom designed MDL joints. We are proud of this and continue to fully support the experienced engineering and manufacturing groups that produce these high quality components. This catalog lists some of our outstanding models. MDL's engineering group is experienced in developing specials to meet your specific requirements.

Ordering Information*

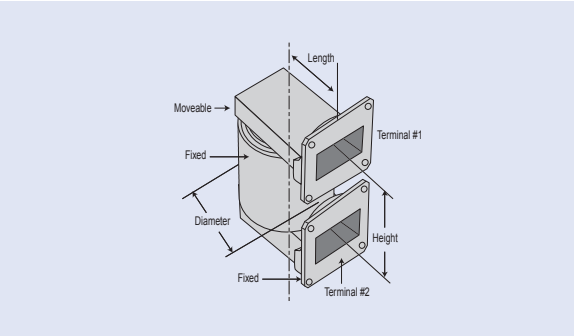

Example: 90RU116-20P-I-E-M

A Basic model number is shown in the catalog for each style and frequency range. In ordering, specify this model number plus:

1. **Power Level & Pressure** at which the point will be operated. The peak power ratings specified are based on the use of dry air or nitrogen and a pulse length of 2.75µ sec. Higher levels can be achieved using special dielectric gases. Contact our engineering department for cw ratings.
2. **Material** – Aluminum or brass are standard.
3. **Flange Terminations** – Specify the flange types at the fixed and moveable arms. Flanges per MIL-F-3922 are standard but others can be supplied on special order.
4. **Finish** – The standard finish for aluminum joints is an iridite coating per MIL-C-5541. Brass models are silver plated per MIL-QQ-S-365A. A blue paint, per Federal Standard, 595, color #25109, may be applied if requested. Other metal finishes and paints are available.
5. **Mounting Flange** – A mounting flange attached to the fixed arm with the center line at one half the height dimension may be supplied on request. Standard flanges are shown on the proceeding page. Others can be supplied on special order.
6. **Leak Rate** – The standard leak rate for pressurized units is 10 SCCM.

MODEL NUMBER	PRESSURIZED	TERMINAL FLANGE	MATERIAL	MOUNTING FLANGE
90RU116	20P	I	E	M

Pressurized for 20PSIG.
Number indicates desired pressure

For non-pressurized, omit numerals and "P".

Flange Termination - 2 Flanges

Flange	Port 1 Moveable Arm	Port 2 Fixed Arm
1	Cover	Cover
2	Cover	Choke
3	Choke	Cover
4	Choke	Choke

Flange Termination - 4 Flanges

Flange	Port 1	Port 2	Port 3	Port 4
1	Cover	Cover	Cover	Cover
2	Cover	Cover	Cover	Choke
3	Cover	Cover	Choke	Cover
4	Cover	Cover	Choke	Choke
5	Cover	Choke	Cover	Cover
6	Cover	Choke	Cover	Choke
7	Cover	Choke	Choke	Cover
8	Cover	Choke	Choke	Choke
9	Choke	Cover	Cover	Cover
10	Choke	Cover	Cover	Choke
11	Choke	Cover	Choke	Cover
12	Choke	Cover	Choke	Choke
13	Choke	Choke	Cover	Cover
14	Choke	Choke	Cover	Choke
15	Choke	Choke	Choke	Cover
16	Choke	Choke	Choke	Choke

Material and Finish

Code	Material	Finish
C	Aluminum Alloy	Chromated
D	Copper Alloy	Silver Plated
E	Aluminum Alloy	Chromated and Painted Blue
F	Copper Alloy	Silver Plated and Painted Blue

Mounting Flange
For joints without flanges, omit numerals and "M".

BAND	A DIA.	B DIA.	C DIA.	NO OF HOLES
WR22	2.88	0.166	2.516	4
WR28	2.88	0.166	2.516	4
WR34	2.88	0.166	2.516	4
WR42	2.00	0.166	1.625	4
WR62	2.78	0.166	2.310	4
WR75	3.00	0.213	2.625	4
WR90	2.78	0.166	2.310	4
WR112	3.25	0.166	2.750	6
WR137	3.87	0.209	3.245	6
WR159	4.25	0.209	3.625	6
WR187	4.25	0.209	3.625	6
WR229	4.94	0.266	4.190	8
WR284	5.75	0.266	5.187	8

** MDL reserves the right to discontinue or change specifications without notice.*

Mounting Flange Configurations

Circumferential location of equally spaced holes are as follows:

4 HOLES

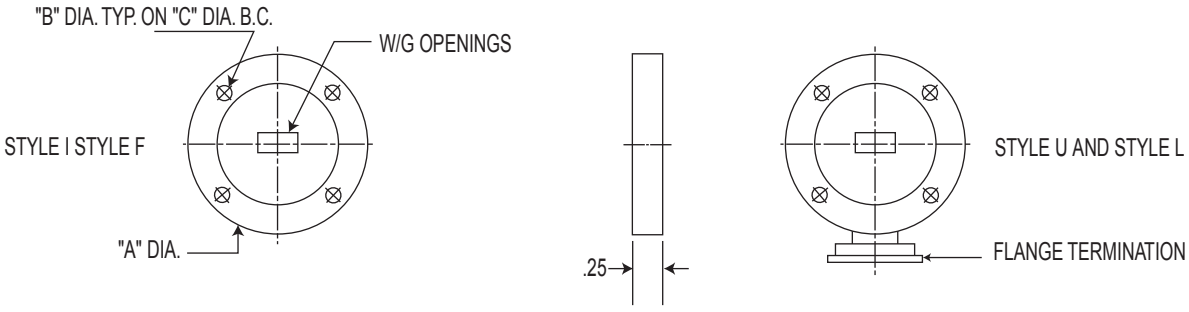

6 HOLES

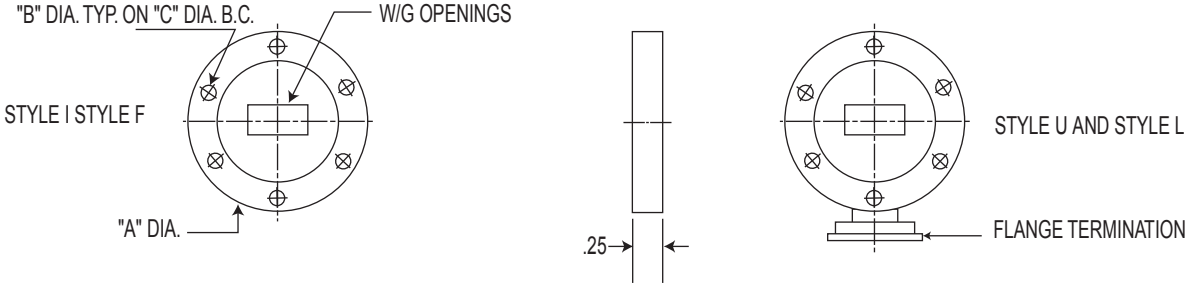

8 HOLES

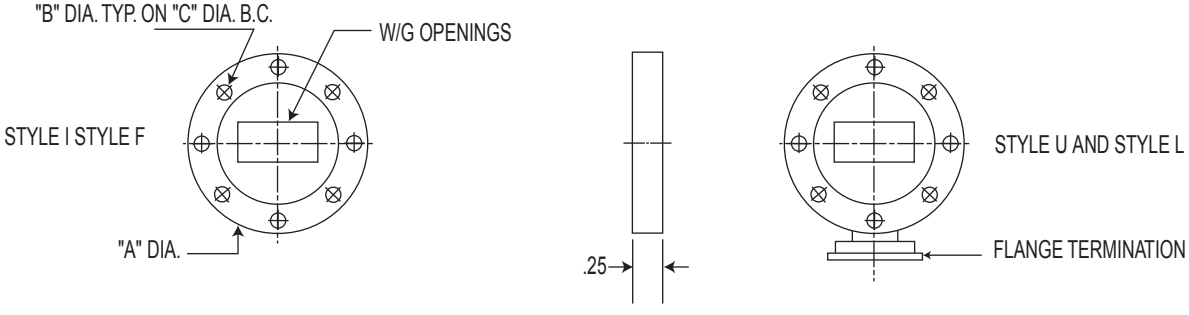

"U" Style Rotary Joints

"U" Style, two arms are 90º to the rotating axis, one is fixed to the housing-one free to rotate.

BAND	FREQ. RANGE GHz	MDL MODEL	VSWR	WOW MAX	INSERTION LOSS MAX	PEAK POWER AT PRESSURE (PSIG) 0	15	30	45	CW	HOUSING DIA.	HGT	LTH
WR22	43.5 - 45.5	22RU16	1.50	1.05	1.00						2.00	1.34	2.25
WR28	32.2 - 33.0	28RU16	1.15	1.05	0.25	20	50	80	-		2.00	1.335	2.25
	34.5 - 35.5	28RU26	1.15	1.05	0.25	20	50	80	-		2.00	1.235	2.25
	27.5 - 30.0	28RU36	1.20	1.05	0.20	20	50	80	-		1.99	1.23	2.25
	34.5 - 35.5	28RU46	1.40	1.10	0.50		2			350 W	1.63		
WR34	27.5 - 30.0	34RU16	1.20	1.02	0.20					600 W	1.99	1.23	2.25
	23.0 - 28.0	34RU26	1.25	1.02	0.30					300 W	1.62	1.24	2.25
	29.2 - 29.6	34RU36	1.20	1.05	0.40					300 W	1.62	1.24	2.25
WR42	18.1 - 20.2	42RU16	1.20	1.03	0.20	20	50	80	-		1.25	1.82	1.38
WR62	13.5 - 14.5	62RU136	1.15	1.03	0.10	30	65	120	-		1.81	2.00	1.38
	13.5 - 14.5	62RU146	1.20	1.03	0.10	100	200	380	-		1.81	2.00	1.38
	14.0 - 15.0	62RU156	1.10	1.02	0.10	30	65	120	-		1.81	2.00	1.38
	14.0 - 15.0	62RU166	1.15	1.02	0.10	100	200	380	-		1.81	2.00	1.38
	14.5 - 15.5	62RU176	1.10	1.02	0.10	30	65	120	-		1.81	2.00	1.38
	14.5 - 15.5	62RU186	1.15	1.02	0.10	100	200	380	-		1.81	2.00	1.38
	15.0 - 16.0	62RU196	1.10	1.02	0.10	30	65	120	-		1.81	2.00	1.38
	15.0 - 16.0	62RU206	1.15	1.02	0.10	100	200	380	-		1.81	2.00	1.38
	15.5 - 16.5	62RU216	1.10	1.02	0.10	30	65	120	-		1.81	2.00	1.38
	15.5 - 16.5	62RU226	1.15	1.02	0.10	100	200	380	-		1.81	2.00	1.38
	16.0 - 17.0	62RU236	1.10	1.02	0.10	30	65	120	-		1.81	2.00	1.38
	16.0 - 17.0	62RU246	1.15	1.02	0.10	100	200	380	-		1.81	2.00	1.38
	13.5 - 17.0	62RU256	1.35	1.03	0.15	30	65	120	-		1.81	2.00	1.38
	17.3 - 18.4	62RU266	1.20	1.02	0.25					1.1 KW	1.63	1.75	1.75
WR75	10.0 - 15.0	75RU16	1.30	1.02	0.50					1 KW	1.81	1.91	2.00
	10.7 - 12.75	75RU26	1.20	1.02	0.20					1.1 KW	2.10	1.97	2.00
	14.0 - 14.5	75RU36	1.10	1.05	0.20			30		1 KW	1.81	2.25	2.00
WR90	8.2 - 9.0	90RU226	1.15	1.02	0.10	175	350	665	-		1.81	2.00	1.38
	8.2 - 9.0	90RU236	1.20	1.02	0.10	250	500	950	-		1.81	2.00	1.38
	8.5 - 9.6	90RU246	1.10	1.02	0.10	175	350	665	-		1.81	2.00	1.38
	8.5 - 9.6	90RU256	1.15	1.02	0.10	250	500	950	-		1.81	2.00	1.38
	9.0 - 10.0	90RU266	1.10	1.02	0.10	175	350	665	-		1.81	2.00	1.38
	9.0 - 10.0	90RU276	1.15	1.02	0.10	250	500	950	-		1.81	2.00	1.38
	9.5 - 10.5	90RU286	1.15	1.02	0.10	175	350	665	-		1.81	2.00	1.38
	10.0 - 11.0	90RU296	1.15	1.02	1.15	175	350	665	-		1.81	2.00	1.38
	8.2 - 11.0	90RU316	1.35	1.03	0.15	175	350	665	-		1.81	2.00	1.38
	8.4 - 9.0	90RU326	1.10	1.05	0.20	15				1 KW		1.75	1.38
WR102	9.8 - 10.5	102RU16	1.15	1.03	0.20		62			4.6 KW		5.19	4.00
	9.8 - 10.5	102RU26	1.15	1.05	0.10		5			350 W	1.81	2.00	3.62

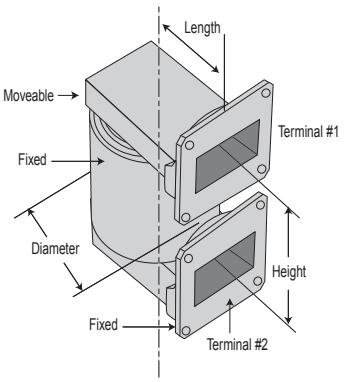

"U" Style Rotary Joints

BAND	FREQ. RANGE GHz	MDL MODEL	VSWR	WOW MAX	INSERTION LOSS MAX	PEAK POWER AT PRESSURE (PSIG) 0	15	30	45	CW	HOUSING DIA.	HGT	LTH
WR112	7.5 - 8.5	112RU186	1.10	1.02	0.10	225	450	850	-		2.25	2.39	2.00
	7.5 - 8.5	112RU196	1.10	1.02	0.10	300	600	1150	-		2.25	2.39	2.00
	8.0 - 9.0	112RU206	1.10	1.02	0.10	225	450	850	-		2.25	2.39	2.00
	8.0 - 9.0	112RU216	1.10	1.02	0.10	300	600	1150	-		2.25	2.39	2.00
	8.5 - 9.6	112RU226	1.10	1.02	0.10	225	450	850	-		2.25	2.39	2.00
	8.5 - 9.6	112RU236	1.10	1.02	0.10	300	600	1150	-		2.25	2.39	2.00
	9.0 - 9.9	112RU246	1.15	1.03	0.10	225	450	850	-		2.25	2.39	2.00
	9.0 - 9.9	112RU256	1.15	1.03	0.10	300	600	1150	-		2.25	2.39	2.00
	7.5 - 9.6	112RU266	1.35	1.03	0.15	225	450	850	-		2.25	2.39	2.00
	9.7 - 10.3	112RU276	1.15	1.05	0.15					6 KW	3.05	2.94	4.94
	9.95 - 10.5	112RU286	1.15	1.03	0.25					6 KW			3.50
WR137	5.8 - 6.8	137RU136	1.10	1.02	0.10	400	800	1525	2200		2.62	3.25	3.00
	6.5 - 7.5	137RU146	1.20	1.02	0.10	400	800	1525	2200		2.62	3.25	3.00
	5.8 - 7.8	137RU156	1.35	1.03	0.15	400	800	1525	2200		2.62	3.25	3.00
	5.8 - 6.4	137RU166	1.20	1.02	0.20		800				2.62	3.25	3.00
WR159	5.8 - 6.4	159RU26	1.15	1.02	0.10	450	900	1725	2500		3.00	4.00	3.25
WR187	5.4 - 5.9	187RU166	1.10	1.02	0.10	650	1300	2475	3575		3.00	4.00	3.44
	5.25 - 6.0	187RU176	1.35	1.03	0.15	650	1300	2475	3575		3.00	4.00	3.44
	4.5 - 5.85	187RU186	1.25	1.03	0.15	650	1300	2475	3575		3.00	4.00	3.44
WR229	3.6 - 4.3	229RU26	1.15	1.02	0.10	800	1600	3050	4400		3.44	5.00	5.00
WR284	2.7 - 3.2	284RU36	1.15	1.02	0.10	1000	2000	3800	5500		4.63	8.00	6.25

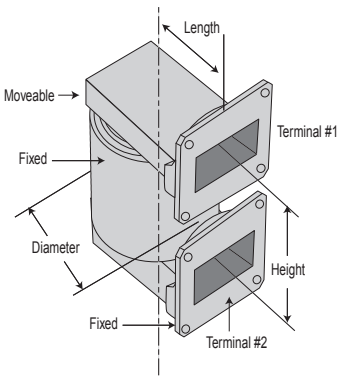

"L" Style Rotary Joints

"L" Style, one 90º arm fixed to the housing-one inline arm is free to rotate.

BAND	FREQ. RANGE GHz	MDL MODEL	VSWR	WOW MAX	INSERTION LOSS MAX	PEAK POWER AT PRESSURE (PSIG) 0	15	30	45	CW	HOUSING DIA.	HGT	LTH
WR22	43.5 - 45.5	22RL16	1.50	1.05	1.00						1.20	2.09	1.08
WR28	34.5 - 35.5	28RL16	1.30	1.10	0.30		2			350 W	1.20	2.09	1.08
WR34	27.5 - 31.0	34RL16	1.30	1.02	0.50	20	50	80	-		1.99	2.38	2.25
WR42	20.0 - 20.3	42RL16	1.20	1.02	0.20					600 W	1.25	2.41	1.38
WR62	13.5 - 14.5	62RL106	1.15	1.02	0.10	30	65	120	-		1.81	2.50	1.38
	13.5 - 14.5	62RL116	1.20	1.02	0.10	75	165	300	-		1.81	2.50	1.38
	14.0 - 15.0	62RL126	1.10	1.02	0.10	30	65	120	-		1.81	2.50	1.38
	14.0 - 15.0	62RL136	1.15	1.02	0.10	75	165	300	-		1.81	2.50	1.38
	14.5 - 15.5	62RL146	1.10	1.02	0.10	30	65	120	-		1.81	2.50	1.38
	14.5 - 15.5	62RL156	1.15	1.02	0.10	75	165	300	-		1.81	2.50	1.38
	15.0 - 16.0	62RL166	1.10	1.02	0.10	30	65	120	-		1.81	2.50	1.38
	15.0 - 16.0	62RL176	1.15	1.02	0.10	75	165	300	-		1.81	2.50	1.38
	15.5 - 16.5	62RL186	1.10	1.02	0.10	30	65	120	-		1.81	2.50	1.38
	15.5 - 16.5	62RL196	1.15	1.02	0.10	75	165	300	-		1.81	2.50	1.38
	16.0 - 17.0	62RL206	1.10	1.02	0.10	30	65	120	-		1.81	2.50	1.38
	16.0 - 17.0	62RL216	1.15	1.02	0.10	75	165	300	-		1.81	2.50	1.38
	13.5 - 17.0	62RL226	1.35	1.04	0.20	30	65	120	-		1.81	2.50	1.38
WR75	10.75-14.5	75RL16	1.20	1.05	0.20					600 W	1.88	3.00	2.00
	12.2 - 12.75	75RL26	1.20	1.05	0.20					600 W	2.12	3.00	2.00
	14.0 - 14.5	75RL36	1.20	1.05	0.20					600 W	1.88	3.25	2.00
	14.0 - 14.5	75RL46	1.15	1.02	0.10			30		1 KW	1.75	3.55	4.00
WR90	8.2 - 9.0	90RL256	1.15	1.02	0.10	175	350	675	-		1.81	2.64	1.38
	8.2 - 9.0	90RL266	1.20	1.02	0.10	250	500	950	-		1.81	2.64	1.38
	8.5 - 9.6	90RL276	1.10	1.02	0.10	175	350	675	-		1.81	2.64	1.38
	8.5 - 9.6	90RL286	1.15	1.02	0.10	250	500	950	-		1.81	2.64	1.38
	9.0 - 10.0	90RL296	1.10	1.02	0.10	175	350	675	-		1.81	2.64	1.38
	9.0 - 10.0	90RL306	1.15	1.02	0.10	250	500	950	-		1.81	2.64	1.38
	9.5 - 10.5	90RL316	1.15	1.02	0.10	175	350	675	-		1.81	2.64	1.38
	10.0 - 11.0	90RL326	1.15	1.02	0.10	175	350	675	-		1.81	2.64	1.38
	8.2 - 10.0	90RL336	1.25	1.03	0.15	175	350	675	-		1.81	2.64	1.38
	8.2 - 11.0	90RL346	1.35	1.03	0.20	175	350	675	-		1.81	2.64	1.38
WR112	7.5 - 8.5	112RL146	1.10	1.02	0.10	200	400	775	-		2.25	3.20	2.00
	7.5 - 8.5	112RL156	1.15	1.02	0.10	275	550	1050	-		2.25	3.20	2.00
	8.0 - 9.0	112RL166	1.10	1.02	0.10	200	400	775	-		2.25	3.20	2.00
	8.0 - 9.0	112RL176	1.15	1.02	0.10	275	550	1050	-		2.25	3.20	2.00
	8.5 - 9.6	112RL186	1.10	1.02	0.10	200	400	775	-		2.25	3.20	2.00
	8.5 - 9.6	112RL196	1.15	1.02	0.10	275	550	1050	-		2.25	3.20	2.00
	9.0 - 9.9	112RL206	1.15	1.03	0.15	200	400	775	-		2.25	3.20	2.00

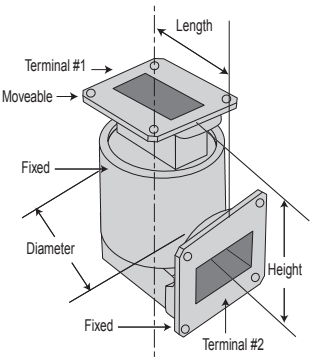

"L" Style Rotary Joints

BAND	FREQ. RANGE GHz	MDL MODEL	VSWR	WOW MAX	INSERTION LOSS MAX	PEAK POWER AT PRESSURE (PSIG) 0	15	30	45	CW	HOUSING DIA.	HGT	LTH
WR137	5.8 - 6.8	137RL26	1.10	1.02	0.10	350	700	1350	1925		2.62	4.12	3.00
	6.5 - 7.5	137RL36	1.15	1.02	0.10	350	700	1350	1925		2.62	4.12	3.00
	5.8 - 7.8	137RL46	1.30	1.03	0.15	350	600	1140	1650		2.62	4.12	3.00
	7.9 - 8.4	137RL56	1.20	1.05	0.15					1.75 KW	2.25	4.12	3.00
WR159	5.8 - 6.4	159RL26	1.15	1.02	0.10	400	800	1525	2200		3.00	4.83	3.25
WR187	5.4 - 5.9	187RL66	1.10	1.02	0.10	450	900	1725	2500		3.00	5.33	3.44
	5.25 - 6.0	187RL86	1.20	1.03	0.10	450	900	1725	2500		3.00	5.33	3.44
	5.0 - 5.85	187RL96	1.20	1.03	0.10	450	900	1725	2500		3.00	5.33	3.44
	4.9 - 5.1	187RL106	1.15	1.02	0.10			2000		3 KW	3.02	5.33	3.44
WR229	3.6 - 4.3	229RL26	1.15	1.02	0.10	550	1100	2100	3025		3.44	6.24	5.00
WR284	2.7 - 3.2	284RL26	1.15	1.02	0.10	700	1400	2650	3850		4.63	8.63	6.25
	2.7 - 3.2	284RL36	1.15	1.02	0.10	700	1400	2650	3850		4.63	9.25	6.25
	3.0 - 3.5	284RL46	1.25	1.02	0.10		1300			4.5 KW	4.63	8.63	6.25

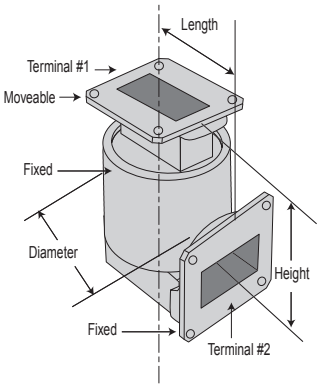

"F" Style Rotary Joints

"F" Style, one inline arm is fixed to the housing-one 90º arm is free to rotate.

BAND	FREQ. RANGE GHz	MDL MODEL	VSWR	WOW MAX	INSERTION LOSS MAX	PEAK POWER AT PRESSURE (PSIG) 0	15	30	45	CW	HOUSING DIA.	HGT	LTH
WR22	43.50 - 45.50	22RF16	1.50	1.05	1.00	20	50	80			1.99	2.38	2.25
WR34	27.50 - 30.00	34RF16	1.20	1.02	0.20	20	50	80	-		1.99	2.38	2.25
WR62	13.50 - 14.50	62RF106	1.15	1.02	0.10	30	65	120	-		1.81	2.50	1.38
	13.50 - 14.50	62RF116	1.20	1.02	0.10	75	165	300	-		1.81	2.50	1.38
	14.00 - 15.00	62RF126	1.10	1.02	0.10	30	65	120	-		1.81	2.50	1.38
	14.00 - 15.00	62RF136	1.15	1.02	0.10	75	165	300	-		1.81	2.50	1.38
	14.50 - 15.50	62RF146	1.10	1.02	0.10	30	65	120	-		1.81	2.50	1.38
	14.50 - 15.50	62RF156	1.15	1.02	0.10	75	165	300	-		1.81	2.50	1.38
	15.00 - 16.00	62RF166	1.10	1.02	0.10	30	65	120	-		1.81	2.50	1.38
	15.00 - 16.00	62RF176	1.15	1.02	0.10	75	165	300	-		1.81	2.50	1.38
	15.5 0- 16.50	62RF186	1.10	1.02	0.10	30	65	120	-		1.81	2.50	1.38
	15.50 - 16.50	62RF196	1.15	1.02	0.10	75	165	300	-		1.81	2.50	1.38
	16.00 - 17.00	62RF206	1.10	1.02	0.10	30	65	120	-		1.81	2.50	1.38
	16.00 - 17.00	62RF216	1.15	1.02	0.10	75	165	300	-		1.81	2.50	1.38
	13.50 - 17.00	62RF226	1.35	1.04	0.20	30	65	120	-		1.81	2.50	1.38
WR75	10.75 - 14.5	75RF16	1.20	1.05	0.20					600 W			
	14.00 - 14.50	75RF26	1.10	1.02	0.10			30		1 KW	1.50	4.18	3.66
WR90	8.20 - 9.00	90RF256	1.15	1.02	0.10	175	350	675	-		1.81	2.64	1.38
	8.20 - 9.00	90RF266	1.20	1.02	0.10	250	500	950	-		1.81	2.64	1.38
	8.50 - 9.6	90RF276	1.10	1.02	0.10	175	350	675	-		1.81	2.64	1.38
	8.50 - 9.60	90RF286	1.15	1.02	0.10	250	500	950	-		1.81	2.64	1.38
	9.00 - 10.00	90RF296	1.10	1.02	0.10	175	350	675	-		1.81	2.64	1.38
	9.00 - 10.00	90RF306	1.15	1.02	0.10	250	500	950	-		1.81	2.64	1.38
	9.50 - 10.50	90RF316	1.15	1.02	0.10	175	350	675	-		1.81	2.64	1.38
	10.00 - 11.00	90RF326	1.15	1.02	0.10	175	350	675	-		1.81	2.64	1.38
	8.20 - 10.00	90RF336	1.25	1.03	0.15	175	350	675	-		1.81	2.64	1.38
	8.20 - 11.00	90RF346	1.35	1.03	0.20	175	350	675	-		1.81	2.64	1.38
WR112	7.50 - 8.50	112RF146	1.10	1.02	0.10	200	400	775	-		2.25	3.20	2.00
	7.50 - 8.50	112RF156	1.15	1.02	0.10	275	550	1050	-		2.25	3.20	2.00
	8.00 - 9.00	112RF166	1.10	1.02	0.10	200	400	775	-		2.25	3.20	2.00
	8.00 - 9.00	112RF176	1.15	1.02	0.10	275	550	1050	-		2.25	3.20	2.00
	8.50 - 9.60	112RF186	1.10	1.02	0.10	200	400	775	-		2.25	3.20	2.00
	8.50 - 9.60	112RF196	1.15	1.02	0.10	275	550	1050	-		2.25	3.20	2.00
	9.00 - 9.90	112RF206	1.15	1.03	0.15	200	400	775	-		2.25	3.20	2.00
WR137	5.80 - 6.80	137RF26	1.10	1.02	0.10	350	700	1350	1925		2.62	4.12	3.00
	6.50 - 7.50	137RF36	1.15	1.02	0.10	350	700	1350	1925		2.62	4.12	3.00
	5.80 - 7.80	137RF46	1.30	1.03	0.15	300	600	1140	1650		2.62	4.12	3.00
WR159	5.80 - 6.40	159RF26	1.15	1.02	0.10	400	800	1525	2200		3.00	4.83	3.25
WR187	5.40 - 5.90	187RF66	1.10	1.02	0.10	450	900	1725	2500		3.00	5.33	3.44
	5.25 - 6.00	187RF86	1.20	1.03	0.10	450	900	1725	2500		3.00	5.33	3.44
	5.00 - 5.85	187RF96	1.20	1.03	0.10	450	900	1725	2500		3.00	5.33	3.44
WR229	3.60- 4.30	229RF26	1.15	1.02	0.10	550	1100	2100	3025		3.44	6.24	5.00
WR284	2.70 - 3.2	284RF26	1.15	1.02	0.10	700	1400	2650	3850		4.63	8.63	6.25
	2.70 - 3.20	284RF36	1.15	1.02	0.10	700	1400	2650	3850		4.63	9.25	6.25

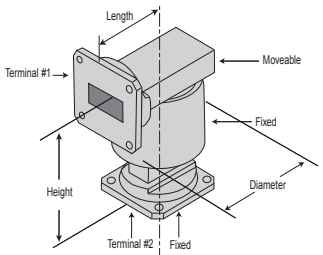

"I" Style Rotary Joints

"I" (inline) Style, two opposite arms concentric with the axis of rotation-one fixed to the housing-one free to rotate.

BAND	FREQ. RANGE GHz	MDL MODEL	VSWR MAX	WOW MAX	INSERTION LOSS MAX	PEAK POWER AT PRESSURE (PSIG) 0	15	30	45	CW	HOUSING DIA.	HGT
WR22	43.50 - 45.50	22RJ16	1.50	1.05	1.00	20	50	80	-		1.99	3.23
WR42	20.20 - 21.20	42RJ16	1.50	1.05	1.00	30	65	120	-		1.25	3.00
WR62	13.50 - 14.05	62RJ126	1.15	1.02	0.10	30	60	120	-		1.81	3.00
	13.50 - 14.50	62RJ136	1.15	1.02	0.10	75	165	300	-		1.81	3.00
	14.00 - 15.00	62RJ146	1.10	1.02	0.10	30	60	120	-		1.81	3.00
	14.00 - 15.00	62RJ156	1.15	1.02	0.10	75	165	300	-		1.81	3.00
	14.50 - 15.50	62RJ166	1.10	1.02	0.10	30	60	120	-		1.81	3.00
	14.50 - 15.50	62RJ176	1.15	1.02	0.10	75	165	300	-		1.81	3.00
	15.00 - 16.00	62RJ186	1.10	1.02	0.10	30	60	120	-		1.81	3.00
	15.00 - 16.00	62RJ196	1.15	1.02	0.10	75	165	300	-		1.81	3.00
	15.50 - 16.50	62RJ206	1.10	1.02	0.10	30	60	120	-		1.81	3.00
	15.50 - 16.50	62RJ216	1.15	1.02	0.10	75	165	300	-		1.81	3.00
	16.00 - 17.00	62RJ226	1.10	1.02	0.10	30	60	120	-		1.81	3.00
	16.00 - 17.00	62RJ236	1.15	1.02	0.10	75	165	300	-		1.81	3.00
	13.50 - 17.50	62RJ246	1.35	1.03	0.15	30	60	120	-		1.81	3.00
	13.50 - 15.50	62LM16	1.15	1.02	0.10	150	330	600	-		1.62	1.10
WR75	14.00 - 14.50	75RJ16	1.10	1.02	0.10	75	165	300	-		1.50	3.50
	13.75 - 14.50	75RJ26	1.10	1.02	0.10	30				600 W	1.27	3.50
WR90	8.20 - 9.00	90RJ246	1.10	1.02	0.10	175	350	675	-		1.81	3.29
	8.20 - 9.00	90RJ256	1.10	1.02	0.10	250	500	950	-		1.81	3.29
	8.50 - 9.60	90RJ266	1.10	1.02	0.10	175	350	675	-		1.81	3.29
	8.50 - 9.60	90RJ276	1.10	1.02	0.10	250	500	950	-		1.81	3.29
	9.00 - 10.00	90RJ286	1.10	1.02	0.10	175	350	675	-		1.81	3.29
	9.00 - 10.00	90RJ296	1.10	1.02	0.10	250	500	950	-		1.81	3.29
	9.50 - 10.50	90RJ306	1.15	1.02	0.10	175	350	675	-		1.81	3.29
	10.00 - 11.00	90RJ316	1.15	1.02	0.15	175	350	675	-		1.81	3.29
	8.20 - 10.00	90RJ326	1.25	1.04	0.15	175	350	675	-		1.81	3.29
	8.20 - 11.00	90RJ336	1.35	1.05	0.15	150	300	575	-		1.81	3.29
WR112	7.20 - 8.20	112RJ146	1.10	1.02	0.10	200	400	775	-		2.25	4.00
	7.50 - 8.50	112RJ156	1.10	1.02	0.10	200	400	775	-		2.25	4.00
	7.50 - 8.50	112RJ166	1.15	1.02	0.10	275	550	1050	-		2.25	4.00
	8.00 - 9.00	112RJ176	1.10	1.02	0.10	200	400	775	-		2.25	4.00
	8.00 - 9.00	112RJ186	1.15	1.02	0.10	275	550	1050	-		2.25	4.00
	8.50 - 9.60	112RJ196	1.10	1.02	0.10	200	400	775	-		2.25	4.00
	8.50 - 9.60	112RJ206	1.15	1.02	0.10	275	550	1050	-		2.25	4.00
	9.00 - 10.00	112RJ216	1.10	1.02	0.10	200	400	775	-		2.25	4.00
	8.00 - 10.00	112RJ226	1.20	1.03	0.10	200	400	775	-		2.25	4.00
WR137	5.80 - 6.80	137RJ26	1.10	1.02	0.10	350	700	1350	1925		2.62	4.98
	6.50 - 7.50	137RJ36	1.15	1.02	0.10	350	700	1350	1925		2.62	4.98
	5.80 - 7.80	137RJ46	1.30	1.03	0.15	350	700	1350	1925		2.62	4.98
	5.80 - 8.40	137RJ56	1.20	1.05	0.20					1.6 KW	2.76	4.98
	5.85 - 6.425	137RJ66	1.20	1.05	0.20					6 KW	2.76	4.98
WR159	5.80 - 6.40	159RJ26	1.15	1.02	0.10	400	800	1525	2200		3.00	5.65

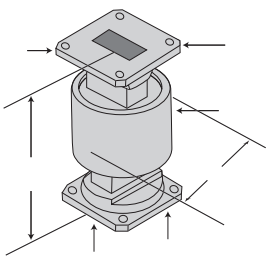

"I" Style Rotary Joints

BAND	FREQ. RANGE GHz	MDL MODEL	VSWR MAX	WOW MAX	INSERTION LOSS MAX	PEAK POWER AT PRESSURE (PSIG) 0	15	30	45	CW	HOUSING DIA.	HGT
WR187	5.4 - 5.9	187RJ66	1.10	1.02	0.10	450	900	1725	2500		3.00	6.66
	5.25 - 6.0	187RJ86	1.20	1.03	0.10	450	900	1725	2500		3.00	6.66
	4.8 - 5.2	187RJ96	1.15	1.02	0.10	450					3.00	6.66
WR229	3.6 - 4.3	229RJ26	1.15	1.02	0.10	550	1100	2100	3025		3.44	7.49
WR284	2.7 - 3.2	284RJ26	1.15	1.02	0.10	700	1400	2650	3850		4.63	9.89
	2.7 - 3.2	284RJ36	1.15	1.02	0.10	700	1400	2650	3850		4.63	9.26
	2.7 - 3.2	284RJ46	1.15	1.02	0.10	700	1400	2650	3850		4.63	10.51
	2.7 - 3.2	284RJ56	1.15	1.02	0.10	700	1400	2650	3850		4.63	9.89
	3.0 - 3.5	284RJ106	1.25	1.02	0.10			1300		4.5 KW	4.63	9.37

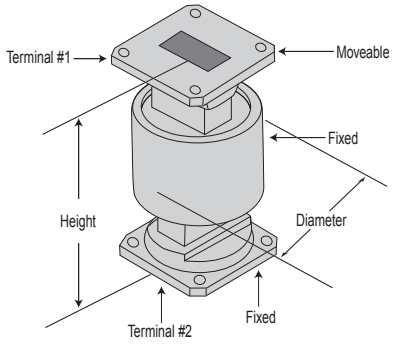

Dual Channel Rotary Joints

Dual Channel, two concentric, electrically isolated (50 dB min.) transmission lines are designed to maintain electrical continuity for two signal paths during simultaneous rotation. Similarly a tri-channel provides three distinct isolated paths while rotated.

BAND	TRANSMISSION LINE	FREQ. RANGE GHz	MDL MODEL	VSWR	WOW MAX	INSERTION LOSS MAX	PEAK POWER AT PRESSURE (PSIG) 0	15	30	45	CW	HOUSING DIA.	HGT O.C.*	HGT I.C.*
WR62	O.C.	15.0 -16.0	62RD16	1.20	1.03	0.20	30	60	120	-		1.81	2.00	5.00
	I.C.	15.0 -16.0		1.30	1.03	0.35	5	10	20	-				
	O.C.	14.0 - 15.0	62RD26	1.20	1.03	0.20	30	60	120	-		1.81	2.00	5.12
	I.C.	14.0 - 15.0		1.30	1.03	0.35	5	10	20	-				
	O.C.	14.5 - 15.5	62RD36	1.20	1.02	0.15	100	300	380	-		1.27	2.06	5.25
	I.C.▲	14.5 - 15.5		1.25	1.05	0.35	5	-	-	-				
	O.C.	15.7 - 17.6	62RD46	1.25	1.05	0.30			120			1.83	2.25	5.40
	I.C	15.7 - 17.6		1.50	1.05	0.60			20					
WR75	O.C.	13.75 - 15.5	75RD36	1.30	1.02	0.10	75	165	300	-		1.27	2.06	5.25
	I.C.▲	11.4 - 12.2		1.35	1.05	0.30	5	-	-	-				
	O.C.	14.0 - 14.5	75RD26	1.20	1.10	0.20					100 W	1.27	2.06	5.25
		12.2 - 12.75		2.00	1.10	0.60								
	I.C.▲	0.95 - 1.45		1.35	1.10	0.30								
WR90	O.C.	8.5 - 9.6	90RD46	1.15	1.02	0.10	200	400	750	-		1.81	2.00	5.75
	I.C.	8.5 - 9.6		1.20	1.03	0.30	10	20	40	-				
	O.C.	8.5 - 9.6	90RD56	1.15	1.02	0.10	200	400	750	-		1.81	2.00	7.29
	I.C.■	8.5 - 0.6		1.25	1.03	0.30	5	-	-	-				
WR102	O.C.	9.8 - 10.5	102RD16	1.20	1.05	0.30		62			5.6 KW			
	I.C.	8.8 - 10.5		1.30	1.05	0.30		5.6			350 W			
WR112	O.C.	7.5 - 8.5	112RD46	1.10	1.03	0.10	300	600	1150	-		2.25	2.39	9.00
	I.C.■	7.5 - 8.5		1.25	1.03	0.30	5	-	-	-				
	O.C.	7.5 - 8.5	112RD56	1.10	1.02	0.10	300	600	1150	-		2.25	2.39	7.87
	I.C.	7.5 - 8.5		1.25	1.03	0.30	20	40	80	-				
	O.C.	8.5 - 9.5	112RD66	1.10	1.02	0.10	300	600	1150	-		2.25	2.39	9.00
	I.C.■	8.5 - 9.5		1.25	1.03	0.30	5	-	-	-				
	O.C.	8.5 - 9.6	112RD76	1.10	1.03	0.10	300	600	1150	-		2.25	2.39	7.87
	I.C.	8.5 - 9.6		1.25	1.03	0.30	20	40	80	-				
	O.C.	8.5 - 10.0	112RD86	1.15	1.05	0.20		20				2.25		
	I.C.▲	8.5 - 10.0		1.50	1.05	0.25		2						
	O.C.	7.9 - 8.4	112RD96	1.20	1.05	0.15		150			2 KW	2.25		
	I.C.▲	7.25 - 7.75		1.50	1.05	0.80								

Notes: ▲ *Type SMA Inner Channel*

■ *Type "N" Inner Channel*

** O.C. = Outer Channel (High Power, larger diameter channel)*

** I.C. = Inner Channel (Low Power, Smaller diameter channel)*

Dual Channel Rotary Joints

BAND	TRANSMISSION LINE	FREQ. RANGE GHz	MDL MODEL	VSWR	WOW MAX	INSERTION LOSS MAX	PEAK POWER AT PRESSURE (PSIG) 0	15	30	45	CW	HOUSING DIA.	HGT O.C.*	HGT I.C.*
WR137	O.C.	7.90 - 8.40	137RD16	1.20	1.05	0.20	400	800	1500	-		2.62	3.25	10.50
	I.C.■	7.25 - 7.75		1.20	1.05	0.50	15	-	-	-				
	O.C.	5.85 - 6.425	137RD36	1.20	1.05	0.20					400 W	2.62		
	I.C.■	3.625 - 4.2		1.20	1.05	0.70								
	O.C.	7.9 - 8.4	137RD26	1.20	1.05	0.20					2 KW	2.25		
	I.C.■	7.25 - 7.75		1.20	1.05	0.70								
WR187	O.C.	5.25 - 5.75	187RD56	1.10	1.02	0.10	650	1300	2475	3575		3.00	5.00	10.50
	I.C.■	5.25 - 5.75		1.25	1.02	0.30	15	-	-	-				
	O.C.	5.25 - 5.75	187RD66	1.10	1.02	0.10	650	1300	2475	3575		3.00	5.00	12.81
	I.C.	5.25 - 5.75		1.25	1.02	0.30	30	60	120	165				
	O.C.	5.4 - 5.9	187RD76	1.10	1.02	0.10	650	1300	2475	3575		3.00	5.00	10.50
	I.C.■	5.4 - 5.9		1.25	1.02	0.30	15	-	-	-				
	O.C.	5.4 - 5.9	187RD86	1.10	1.02	0.10	650	1300	2475	3575		3.00	5.00	12.81
	I.C.	5.4 - 5.9		1.25	1.02	0.30	30	60	120	165				
WR284	O.C.	2.7 - 2.9	284RD36	1.15	1.03	0.10	1200	2400	4560	6600		5.12	8.00	17.80
	I.C.■	1.2 - 1.3		1.30	1.03	0.35	15	-	-	-				
	O.C.	2.875-3.125	284RD46	1.10	1.02	0.10	1200	2400	4560	6600		5.12	8.00	17.80
	I.C.■	2.875-3.125		1.25	1.03	0.30	15	-	-	-				
		1.015-1.105												
	O.C.	3.1 - 3.4	284RD56	1.25	1.02	0.15	1200	-	-	-		4.32	-	-
	I.C.■	1.02 - 1.09		1.30	1.03	0.50	10	-	-	-		-	-	-

Notes: ▲ *Type SMA Inner Channel*

■ *Type "N" Inner Channel*

** O.C. = Outer Channel (High Power, larger diameter channel)*

** I.C. = Inner Channel (Low Power, Smaller diameter channel)*

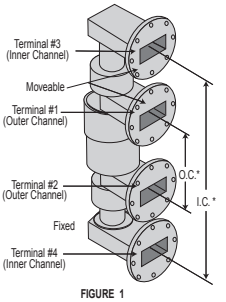

FIGURE 1

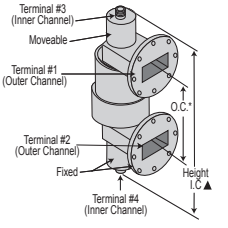

FIGURE 2

Single Channel Coaxial Rotary Joints

MDL's short, low torque, high performance coaxial rotary joints as well as our extensive line of waveguide rotary joints have set the standards of the industry. Our long experience in the design and manufacture of slip rings enables us to develop low resistance, low noise contacts for coaxial rotary joints. This contact, the heart of the short, low torque design, has a proven advantage of long life. These coaxial rotary joints meet or exceed MIL-E-5400 and MIL-E-16400 specifications.

TYPE N

SMA

Single Channel Coaxial Rotary Joints

CONNECTION BAND*	FREQ. RANGE GHz	MDL MODEL	VSWR MAX	WOW MAX	INSERTION LOSS MAX	HOUSING DIA.	HGT	DWG
2.9 mm	DC-10	400RS16	1.20	1.05	0.2	0.56	1.20	
	10-26		1.35	1.05	0.4			
	26-40		1.75	1.05	0.6			
2.9 mm	17.0 - 43	430RS16	1.50	1.02	0.50	0.56	1.25	
SMA	DC - 10	180RS56	1.20	1.02	0.2	0.56	1.00	
	10 - 22		1.35	0.25				
TYPE N	DC - 6.0	120RK56	1.15	1.01	0.20	0.88	1.98	
	6.0 - 15		1.25	1.01	0.30			

Notes: **Female/female*

Dual Channel Coaxial Rotary Joints

CONNECTION BAND	TRANSMISSION RANGE	FREQ.	MDL MODEL	VSWR MAX	WOW MAX	INSERTION LOSS MAX	HOUSING DIA.	HGT O.C.*	
SMA	CHAN 1	DC - 10	180RCD36	1.35	1.02	0.20	1.28	1.87	
		10 - 22		1.50	1.02	0.30			
	CHAN 2	DC - 1.5		1.25	1.05	0.15			
		1.5 - 4		1.50	1.02	0.30			
SMA	CHAN 1	DC - 10	180RCD46	1.35	1.02	0.20	1.28	1.87	
		10 - 22		1.50	1.02	0.30			
	CHAN 2	DC - 1.5		1.25	1.05	0.15			
		1.5 - 4		1.50	1.02	0.30			
SMA	CHAN 1	DC - 10	180RCD56	1.35	1.02	0.20	1.28	1.87	
		10 - 22		1.50	1.02	0.30			
	CHAN 2	DC - 1.5		1.25	1.05	0.15			
		1.5 - 4		1.50	1.02	0.30			
SMA	CHAN 1	DC - 10	180RCD66	1.35	1.02	0.20	1.28	1.87	
		10 - 22		1.50	1.02	0.30			
	CHAN 2	DC - 1.5		1.25	1.05	0.15			
		1.5 - 4		1.50	1.02	0.30			
SMA	CHAN 1	DC - 10	180RCD86	1.35	1.02	0.30	1.25	2.10	
		10 - 22		1.50	1.02	0.50			
	CHAN 2	DC - 1.5		1.25	1.02	0.15			
		1.5 - 4.0		1.50	1.02	.30			
Type N	CHAN 1	DC - 6	120RKD16	1.25	1.02	0.30	2.50	4.62	
		6 - 12 4		1.80	1.03	0.80			
	CHAN 2	DC - 1.5		1.20	1.05	0.20			
		1.5 - 3.0		1.83	1.15	0.30			

Notes: *Add "M" to part number to desiginate mounting flange.*

Dual Channel

Model 180RCD36

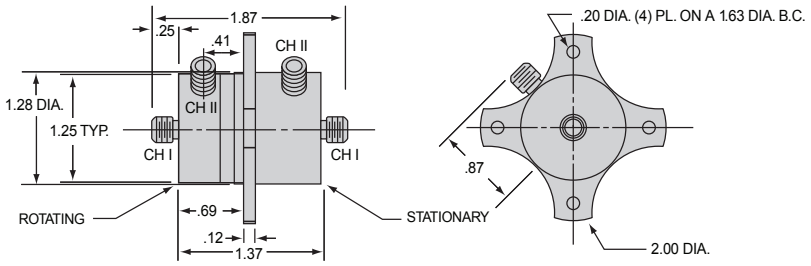

Model 180RCD46

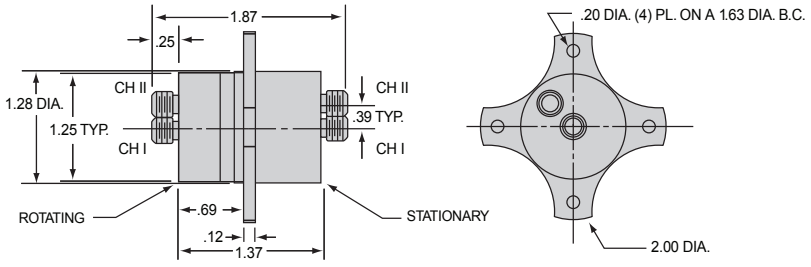

Model 180RCD56

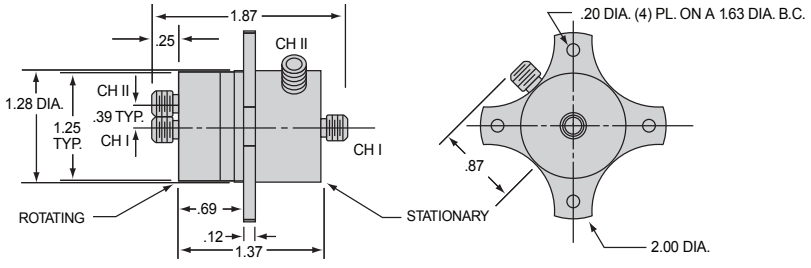

Model 180RCD66

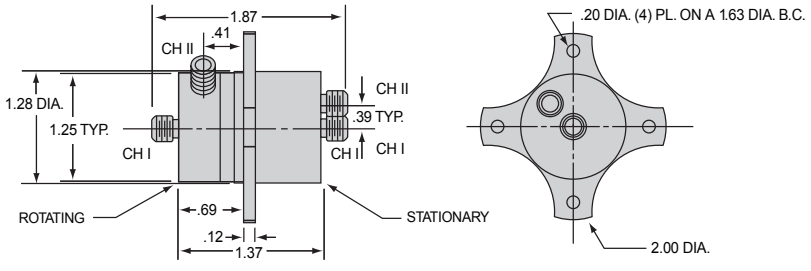

Model 180RCD86

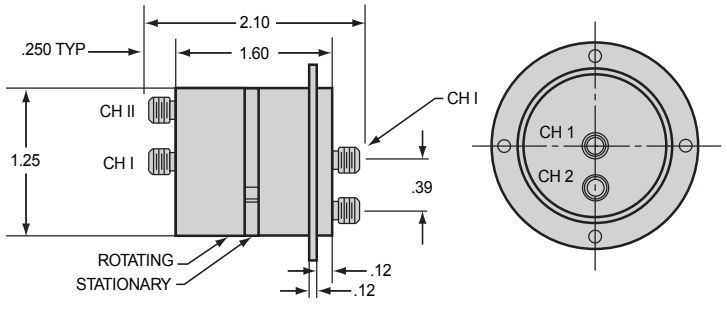

Model 120RKD16

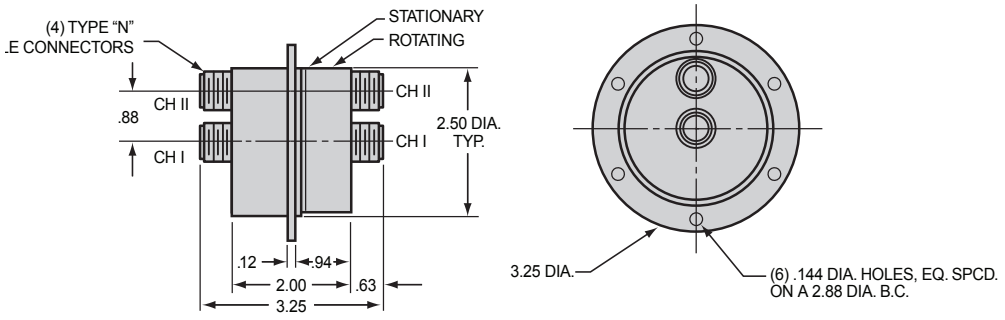

Section 4

Rotary Switches

Introduction

Waveguide switches manufactured by MDL represent the culmination of many years of constant improvement and innovation. Over the years, and in diverse applications, MDL switches have proven to be reliable and to have long life. In addition, they have met the complete electrical and mechanical requirements specified. Each switch uses a non-contacting rotor design for low noise, high isolation, low VSWR, and long life. Each covers the full recommended waveguide frequency range. It can be pressurized and is capable of handling full waveguide power. The solenoid actuated drive mechanism is efficient and thoroughly reliable.

A wide range of options are available in the standard models. Moreover, custom-required features can be incorporated in special models.

Fail - Safe Switches

W/G SIZE	FREQ. RANGE GHz	BASIC MODEL NO.	NO. OF PORTS[2] 3	NO. OF PORTS[2] 4	FLANGE TYPE[8] COVER	FLANGE TYPE[8] CHOKE	ISOL. MIN.	VSWR MAX.	INS. LOSS MAX.	RF CHARACTISTICS[3] RF POWER MAX. KW	SWITCH TIME (ms)[4]	OPER VOLT[5] 28V DC	OPER VOLT[5] 50V DC	OPER VOLT[5] 110V AC	MECH DIM
WR28	26.50-36.00	28SR16	YES	YES	YES	S/O	50	1.10:1	0.10	22	100	STD	N/A	N/A	FIG. 1
WR42	18.00-26.50	42SR16	YES	YES	YES	S/O	50	1.10:1	0.10	43	100	STD	S/O	S/O	FIG. 2
WR62	12.40-18.00	62SR36	YES	YES	YES	YES	60	1.10:1	0.10	120	100	STD	S/O	S/O	FIG. 3
WR90	8.20-12.40	90SR36	YES	YES	YES	YES	60	1.10:1	0.15	200	100	STD	S/O	S/O	FIG. 4
	8.20-12.40	90SR56	YES	YES	YES	YES	60	1.10:1	0.10	200KW/13KW Av.	100	STD	S/O	S/O	FIG. 5
WR102	7.05-11.00	102SR26	YES	YES	YES	YES	60	1.10:1	0.10	275	100	STD	S/O	S/O	FIG. 5
WR112	7.05-10.00	112SR36	YES	YES	YES	YES	60	1.10:1	0.10	350	100	STD	S/O	S/O	FIG. 5
WR137	5.80-8.20	137SR16	YES	YES	YES	–	60	1.10:1	0.10	560	150	STD	S/O	S/O	FIG. 6
WR187	4.50-5.85	187SR16	YES	YES	YES	YES	60	1.10:1	0.10	1,400	250	STD	S/O	S/O	FIG. 7
WR284	2.60-3.95	284SR16	YES	YES	YES	YES	60	1.10:1	0.10	2,200	250	STD	S/O	S/O	FIG. 8

Double Ridged Waveguide Switch

WRD180	18.00-39.00	D180SR16	YES	YES	YES	–	40	1.6:1	0.70	5.8	100	STD	S/O	S/O	FIG. 9

KEY: *S/0 = Special order*
N/A = Not available
STD = Standard
YES = Available as a standard option

All switches have a normal life of 100,000 cycles, but long life up to 500,000 cycles is available on special order.

1 *In fail-safe version the rotor returns to the initial position when current is removed. Holding current is required to keep the rotor in energized position.*

2 *Three port switch is SPDT. Four port switch is DPDT. (Transfer).*

3 *All switches can be pressurized to 45 PSI. the power shown is without pressurization. Typically 1.0 cu cm/min. leak rate.*

4 *Defined as the time from application of the switching current until specified RF performance is reached in the 90° position.*

5 *Current required for fail-safe type is 1.2 at 25°C for actuation and 0.5A at 25°C for hold WR137 thru WR284 2.0A. actuating. All AC drive circuits have diode limiters unless otherwise specified.*

6 *See figure 1 on next page for indicating circuit. All DC connectors are Bendix PT02H-10-6P, unless otherwise specified.*

7 *All switches are of aluminum construction with a chromate finish. Unless otherwise specified all switches are painted with a semi-gloss blue paint per FED-STD-595.*

8 *Flanges conform to MIL-F-3922.*

9 *Isolation greater than specified on special order.*

Indicating Circuits

FIGURE 1

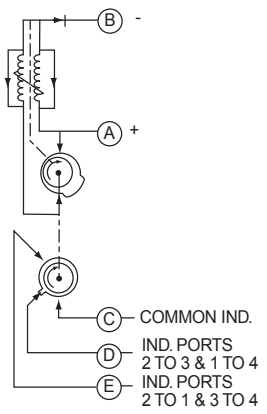

SCHEMATIC WIRING DIAGRAM
SHOWN IN BE-ENERGIZED POSITION
CAUTION: DC POLARITY MUST BE OBSERVED

CONNECTOR OUT PORT 2

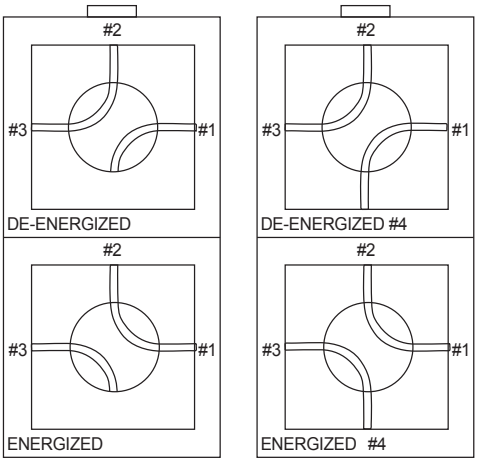

ACTUATION THREE PORTS

ACTUATION FOUR PORTS

SWITCHING SEQUENCE AS VIEWED FROM TOP

Fail - Safe Switches

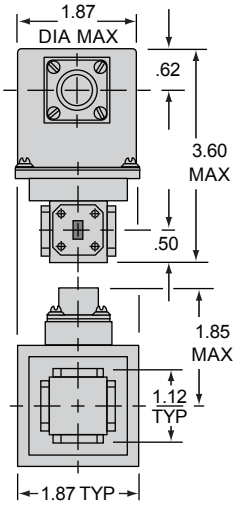

FIGURE 1

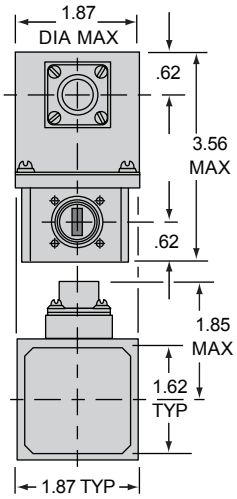

FIGURE 2

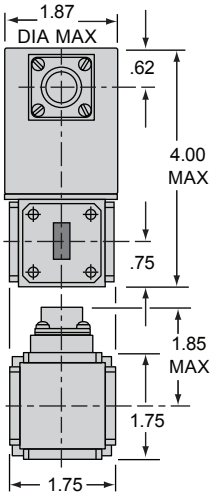

FIGURE 3

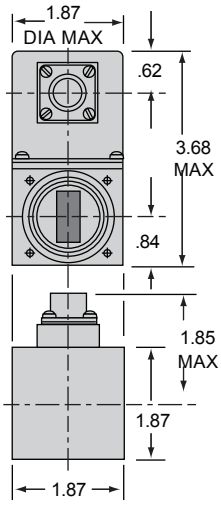

FIGURE 4

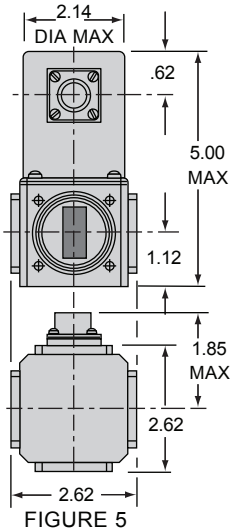

FIGURE 5

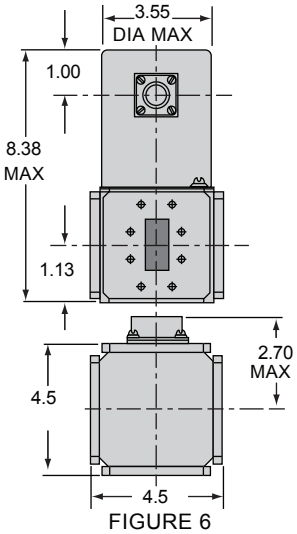

FIGURE 6

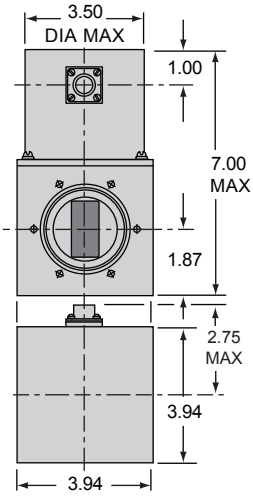

FIGURE 7

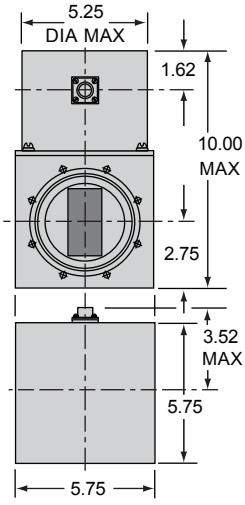

FIGURE 8

Double Ridge Switches

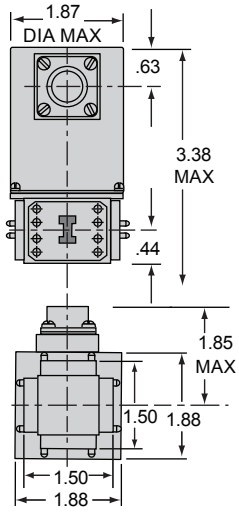

FIGURE 9

Section 5

Directional Couplers

Introduction

At MDL, directional couplers have always received the engineering and manufacturing attention due a major component. A wide variety of types are offered, often tailored to specific applications. Included in the MDL line are cross-guide couplers with a coupling aperture design that is exclusive with MDL – broadwall, sidewall and branchguide couplers that were designed using our own computer program – waveguide loop couplers – a line of high directivity couplers featuring a minimum directivity of 45 dB over a full waveguide frequency band – and, the most recent addition, ridged waveguide couplers. Our experienced design group is also prepared to modify one of our standard models or design an entirely new coupler for your special applications.

Ordering Information*

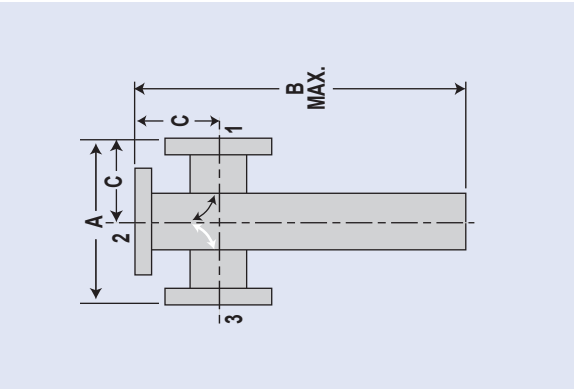

Example: 90XT326-R-20P-1-A

MODEL NUMBER	COUPLING DIRECTION	PRESSURIZED	TERMINAL FLANGES	MATERIAL
90XT326	R	20P	1	A

Coupling Direction
Insert "R" for right-handed coupling.

Omit "R" for left-handed coupling.

Pressurized for 20PSIG.
Number indicates desired pressure

For non-pressurized, omit numerals and "P".

Flange Termination - 3 Flanges & Load

Flange	Port 1	Port 2	Port 3
1	Cover	Cover	Cover
2	Cover	Cover	Choke
3	Cover	Choke	Cover
4	Cover	Choke	Choke
5	Choke	Cover	Cover
6	Choke	Cover	Choke
7	Choke	Choke	Cover
8	Choke	Choke	Choke

Flange Termination - 4 Flanges

Flange	Port 1a	Port 2a	Port 1b	Port 2b
1	Cover	Cover	Cover	Cover
2	Cover	Cover	Cover	Choke
3	Cover	Cover	Choke	Cover
4	Cover	Cover	Choke	Choke
5	Cover	Choke	Cover	Cover
6	Cover	Choke	Cover	Choke
7	Cover	Choke	Choke	Cover
8	Cover	Choke	Choke	Choke
9	Choke	Cover	Cover	Cover
10	Choke	Cover	Cover	Choke
11	Choke	Cover	Choke	Cover
12	Choke	Cover	Choke	Choke
13	Choke	Choke	Cover	Cover
14	Choke	Choke	Cover	Choke
15	Choke	Choke	Choke	Cover
16	Choke	Choke	Choke	Choke

Material and Finish

Code	Material	Finish
A	Aluminum Alloy	No Finish
B	Copper Alloy	No Finish
C	Aluminum Alloy	Chromated
D	Copper Alloy	Silver Plated
E	Aluminum Alloy	Chromated and Painted Blue
F	Copper Alloy	Silver Plated and Painted Blue
G	Copper Alloy	Cadmium Plated
H	Copper Alloy	Silver Plated and Rhodium flashed
L	Copper Alloy	Silver Plated, Rhodium flashed and Painted Blue

** MDL reserves the right to discontinue or change specifications without notice.*

Crossguide Couplers

MDL directional crossguide couplers, utilizing a new type of coupling aperture, exhibit high power-handling characteristics and are excellent for flat coupling over a given bandwidth. When calibrated, these couplers also perform efficiently as secondary standards for attenuating by known factors. MDL crossguide couplers are organized by WR number waveguide designations. For specific applications, MDL can design couplers to meet critical requirements for mean coupling values and directivity over limited bandwidths. Type "N" and "SMA" connectors can be supplied on the secondary arm output upon request overall dimensions remaining the same, or a standard AC adapter may be attached.

Either left or right directions of coupling are available. Left coupling will be supplied as standard, unless otherwise specified.

W/G SIZE FREQ. RANGE (GHz)	MDL MODEL NUMBERS	STYLE NO. OF PORTS	MEAN COUPLING (dB) *	DIRECT-IVITY (dB MIN)	MAX . VSWR	MECHANICAL DIMENSIONS (INCHES) A	B	C
WR28	28XT326		20[1]	15	1.25	1.50	2.50	.75
26.50 GHz	28XT336	3	30[2]	20	1.10	1.50	2.50	.75
to 39.00 GHz	28XT346		40[3]	20	1.10	1.50	2.50	.75
	28XT426		20[1]	20	1.25	1.50	1.50	.75
	28XT436	4	30[2]	20	1.10	1.50	1.50	.75
	28XT446		40[3]	20	1.10	1.50	1.50	.75
WR42	42XT326		20[4]	20	1.25	2.00	3.50	1.00
18.00 GHz	42XT336	3	30	20	1.15	2.00	3.50	1.00
to 26.50 GHz	42XT346		40	20	1.10	2.00	3.50	1.00
	42XT356		50	20	1.08	2.00	3.50	1.00
	42XT366		60	20	1.08	2.00	3.50	1.00
	42XT426		20[4]	20	1.25	2.00	2.00	1.00
	42XT436	4	30	20	1.15	2.00	2.00	1.00
	42XT446		40	20	1.10	2.00	2.00	1.00
	42XT456		50	20	1.08	2.00	2.00	1.00
	42XT466		60	20	1.08	2.00	2.00	1.00
WR51	51XT326		20[4]	20	1.25	2.25	4.00	1.12
15.00 GHz	51XT336	3	30[5]	20	1.15	2.25	4.00	1.12
to 22.00 GHz	51XT346		40[5]	20	1.10	2.25	4.00	1.12
	51XT356		50	20	1.08	2.25	4.00	1.12
	51XT366		60	20	1.08	2.25	4.00	1.12
	51XT426		20[4]	20	1.25	2.25	2.25	1.12
	51XT436	4	30[5]	20	1.15	2.25	2.25	1.12
	51XT446		40[5]	20	1.10	2.25	2.25	1.12
	51XT456		50	20	1.08	2.25	2.25	1.12
	51XT466		60	20	1.08	2.25	2.25	1.12
WR62	62XT326		20[4]	20	1.25	2.25	4.00	1.12
12.40 GHz	62XT336	3	30[4]	20	1.15	2.25	4.00	1.12
to 17.50 GHz	62XT346		40	20	1.10	2.25	4.00	1.12
	62XT356		50	20	1.08	2.25	4.00	1.12
	62XT366		60	20	1.08	2.25	4.00	1.12
	62XT426		20[4]	20	1.25	2.25	2.25	1.12
	62XT436	4	30[4]	20	1.15	2.25	2.25	1.12
	62XT446		40	20	1.10	2.25	2.25	1.12
	62XT456		50	20	1.08	2.25	2.25	1.12
	62XT466		60	20	1.08	2.25	2.25	1.12

Notes: **Tolerance all values +/- 1.0dB*

[1] *Variation = +/- 3dB, 26.5GHz to 39GHz*

[2] *Variation = +/- 2.5dB, 26.5GHz to 40GHz*

[3] *Variation = +/- 1.0dB, 26.5GHz to 40GHz*

[4] *Variation = +/- .8dB*

[5] *Variation = +/- .6dB*

[6] *Variation = +/- .5dB*

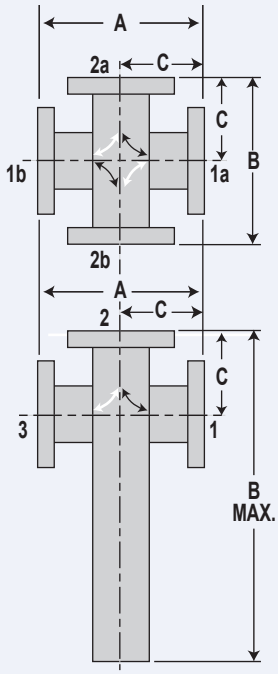

Right coupling indicated by white arrows
Left coupling indicated by black arrows

Variation
20 = +/- .5dB
30 = +/- .5dB
40 = +/- .4dB
50 = +/- .3dB
60 = +/- .3dB

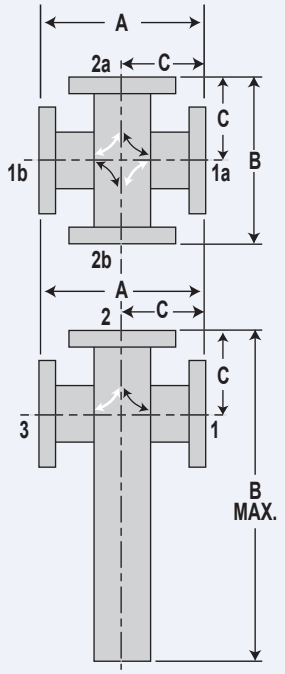

Right coupling indicated by white arrows
Left coupling indicated by black arrows

Variation
20 = +/- .5dB
30 = +/- .5dB
40 = +/- .4dB
50 = +/- .3dB
60 = +/- .3dB

Crossguide Couplers

W/G SIZE FREQ. RANGE (GHz)	MDL MODEL NUMBERS	STYLE NO. OF PORTS	MEAN COUPLING (dB) *	DIRECT-IVITY (dB MIN)	MAX. VSWR	MECHANICAL DIMENSIONS (INCHES) A	B	C
WR75	75XT326		20[4]	20	1.25	2.50	5.25	1.25
10.00 GHz	75XT336	3	30[4]	20	1.15	2.50	5.25	1.25
to 14.50 GHz	75XT346		40[6]	20	1.10	2.50	5.25	1.25
	75XT356		50	20	1.08	2.50	5.25	1.25
	75XT366		60	20	1.08	2.50	5.25	1.25
	75XT426		20[4]	20	1.25	2.50	2.50	1.25
	75XT436	4	30[4]	20	1.15	2.50	2.50	1.25
	75XT446		40[6]	20	1.10	2.50	2.50	1.25
	75XT456		50	20	1.08	2.50	2.50	1.25
	75XT466		60	20	1.08	2.50	2.50	1.25
WR90	90XT326		20[5]	20	1.15	2.63	5.81	1.31
8.20 GHz	90XT336	3	30[5]	20	1.10	2.63	5.81	1.31
to 14.50 GHz	90XT346		40	20	1.07	2.63	5.81	1.31
	90XT356		50	20	1.05	2.63	5.81	1.31
	90XT366		60	20	1.05	2.63	5.81	1.31
	90XT426		20[5]	20	1.15	2.63	2.63	1.31
	90XT436	4	30[5]	20	1.10	2.63	2.63	1.31
	90XT446		40	20	1.07	2.63	2.63	1.31
	90XT456		50	20	1.05	2.63	2.63	1.31
	90XT466		60	20	1.05	2.63	2.63	1.31
WR102	102XT326		20[9]	20**	1.30	2.75	6.00	1.37
7.00 GHz	102XT336	3	30[8]	20**	1.15	2.75	6.00	1.37
to 11.00 GHz	102XT346		40	20**	1.10	2.75	6.00	1.37
	102XT356		50	20**	1.08	2.75	6.00	1.37
	102XT366		60	20**	1.08	2.75	6.00	1.37
	102XT426		20[9]	20**	1.30	2.75	2.75	1.37
	102XT436	4	30[8]	20**	1.15	2.75	2.75	1.37
	102XT446		40	20**	1.10	2.75	2.75	1.37
	102XT456		50	20**	1.08	2.75	2.75	1.37
	102XT466		60	20**	1.08	2.75	2.75	1.37

Notes: **Tolerance all values +/- 1.0dB*
***15dB from 7.0 to 7.5GHz*
[4] *Variation +/- .8dB*
[5] *Variation +/- .6dB*
[6] *Variation +/- .5dB*
[7] *Variation +/- 1.5dB*
[8] *Variation +/- 1.0dB*
[9] *Variation +/- 1.4dB*

Crossguide Couplers

W/G SIZE FREQ. RANGE (GHz)	MDL MODEL NUMBERS	STYLE NO. OF PORTS	MEAN COUPLING (dB) *	DIRECT-IVITY (dB MIN)	MAX. VSWR	MECHANICAL DIMENSIONS (INCHES) A	B	C
WR112	112XT326		20	20	1.15	3.25	5.00	1.62
7.00 GHz	112XT336	3	30	20	1.10	3.25	5.00	1.62
to 10.00 GHz	112XT346		40	20	1.07	3.25	5.00	1.62
	112XT356		50	20	1.05	3.25	5.00	1.62
	112XT366		60	20	1.05	3.25	5.00	1.62
	112XT426		20	20	1.15	3.25	3.25	1.62
	112XT436	4	30	20	1.10	3.25	3.25	1.62
	112XT446		40	20	1.07	3.25	3.25	1.62
	112XT456		50	20	1.05	3.25	3.25	1.62
	112XT466		60	20	1.05	3.25	3.25	1.62
WR137	137XT326		20	20	1.15	4.00	8.00	2.00
5.40 GHz	137XT336	3	30	20	1.10	4.00	8.00	2.00
to 8.20 GHz	137XT346		40	20	1.07	4.00	8.00	2.00
	137XT356		50	20	1.05	4.00	8.00	2.00
	137XT366		60	20	1.05	4.00	8.00	2.00
	137XT426		20	20	1.15	4.00	4.00	2.00
	137XT436	4	30	20	1.10	4.00	4.00	2.00
	137XT446		40	20	1.07	4.00	4.00	2.00
	137XT456		50	20	1.05	4.00	4.00	2.00
	137xT466		60	20	1.05	4.00	4.00	2.00
WR159	159XT326		20[7]	20	1.25	4.50	9.50	2.25
4.90 GHz	159XT336	3	30	20	1.15	4.50	9.50	2.25
to 6.85 GHz	159XT346		40[6]	20	1.10	4.50	9.50	2.25
	159XT356		50	20	1.08	4.50	9.50	2.25
	159XT366		60	20	1.08	4.50	9.50	2.25
	159XT426		20[7]	20	1.25	4.50	4.50	2.25
	159XT436	4	30	20	1.15	4.50	4.50	2.25
	159XT446		40[6]	20	1.10	4.50	4.50	2.25
	159XT456		50	20	1.08	4.50	4.50	2.25
	159XT466		60	20	1.08	4.50	4.50	2.25

Notes: **Tolerance all values +/- 1.0dB*
[6] *Variation +/- .5dB*
[7] *Variation +/- 1.5dB*

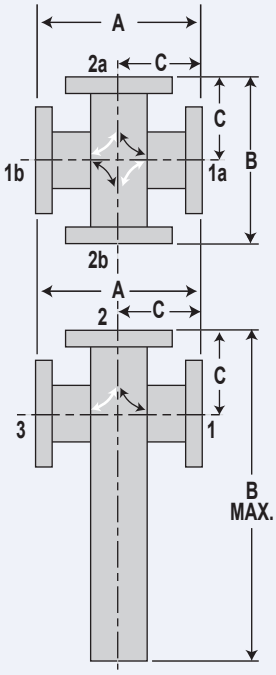

Right coupling indicated by white arrows
Left coupling indicated by black arrows

Variation
20 = +/- .5dB
30 = +/- .5dB
40 = +/- .4dB
50 = +/- .3dB
60 = +/- .3dB

Crossguide Couplers

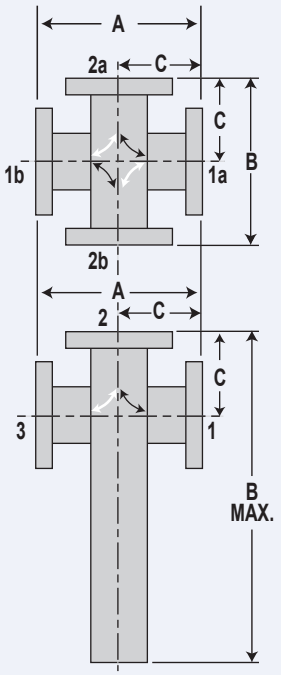

Right coupling indicated by white arrows
Left coupling indicated by black arrows

Variation
20 = +/- .5dB
30 = +/- .5dB
40 = +/- .4dB
50 = +/- .3dB
60 = +/- .3dB

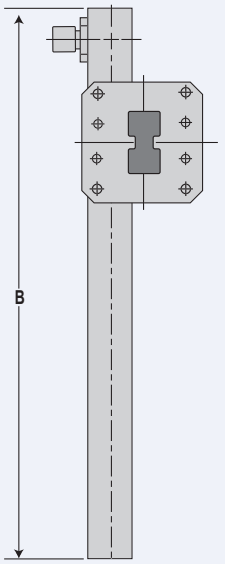

W/G SIZE FREQ. RANGE (GHz)	MDL MODEL NUMBERS	STYLE NO. OF PORTS	MEAN COUPLING (dB) *	DIRECT-IVITY (dB MIN)	MAX. VSWR	MECHANICAL DIMENSIONS (INCHES) A	B	C
WR187	187XT326		20	20	1.15	5.00	10.00	2.50
3.95 GHz	187XT336	3	30	20	1.10	5.00	10.00	2.50
to 5.85 GHz	187XT346		40	20	1.07	5.00	10.00	2.50
	187XT356		50	20	1.05	5.00	10.00	2.50
	187XT366		60	20	1.05	5.00	10.00	2.50
	187XT426		20	20	1.15	5.00	5.00	2.50
	187XT436	4	30	20	1.10	5.00	5.00	2.50
	187XT446		40	20	1.07	5.00	5.00	2.50
	187XT456		50	20	1.05	5.00	5.00	2.50
	187XT466		60	20	1.05	5.00	5.00	2.50
WR229	229XT326		20[4]	20	1.15	7.00	12.00	3.50
3.30 GHz	229XT336	3	30[4]	20	1.10	7.00	12.00	3.50
to 4.90 GHz	229XT346		40[6]	20	1.07	7.00	12.00	3.50
	229XT356		50	20	1.05	7.00	12.00	3.50
	229XT366		60	20	1.05	7.00	12.00	3.50
	229XT426		20[4]	20	1.15	7.00	7.00	3.50
	229XT436	4	30[4]	20	1.10	7.00	7.00	3.50
	229XT446		40[6]	20	1.07	7.00	7.00	3.50
	229XT456		50	20	1.05	7.00	7.00	3.50
	229XT466		60	20	1.05	7.00	7.00	3.50
WR284	284XT326		20[5]	20	1.15	8.00	13.00	4.00
2.60 GHz	284XT336	3	30[5]	20	1.10	8.00	13.00	4.00
to 3.95 GHz	284XT346		40	20	1.07	8.00	13.00	4.00
	284XT356		50	20	1.05	8.00	13.00	4.00
	284XT366		60	20	1.05	8.00	13.00	4.00
	284XT426		20[5]	20	1.15	8.00	8.00	4.00
	284XT436	4	30[5]	20	1.10	8.00	8.00	4.00
	284XT446		40	20	1.07	8.00	8.00	4.00
	284XT456		50	20	1.05	8.00	8.00	4.00
	284XT466		60	20	1.05	8.00	8.00	4.00

Double Ridge Crossguide Couplers

W/G SIZE FREQ. RANGE (GHz)	MDL MODEL NUMBERS	STYLE NO. OF PORTS	MEAN COUPLING (dB) *	DIRECT-IVITY (dB MIN)	MAX. VSWR	MECHANICAL DIMENSIONS (INCHES) A	B	C
WRD-750	D750XT346		40	15	1.05	2.50	6.00	1.25
8.00-16.00	D750XT356	3	50	15	1.05	2.50	6.00	1.25
WRD-475	D475XT346		40	15	1.05	4.50	8.50	2.25
5.00-9.50	D475XT356		50	15	1.05	4.50	8.50	2.25

Notes: **Tolerance all values +/- 1.0dB*
[4] *Variation +/- .8dB*
[5] *Variation +/- .6dB*
[6] *Variation +/- .5dB*

Loop Couplers

MDL waveguide loop coupler cover the frequency spectrum from WR90 to WR2100, and are widely used in RF circuits requiring directional power injection or extraction.

These units are available as uni- or bi-directional couplers. Modifications to the standard designs are available on request.

W/G SIZE	FREQ. RANGE (GHz)	MIN COUPLING VALUE (dB)	WITH UNI-DIRECTIONAL CONNECTORS	(FIG)	WITH BI-DIRECTIONAL CONNECTORS: SAME SIDE	(FIG)	ONE TOP/ ONE BOTTOM	(FIG)
WR90	8.20-12.40	20 to 70	90LT16	1*	90LT26	2*	90LT36	3*
WR112	7.05-10.00	25 to 70	112LT16	1*	112LT26	2*	112LT36	3*
WR137	5.85-8.20	30 to 70	137LT16	4	137LT26	5	137LT36	6
WR159	4.90-7.05	30 to 70	159LT16	4	159LT26	5	159LT36	6
WR187	3.95-5.85	30 to 70	187LT16	4	187LT26	5	187LT36	6
WR229	3.30-4.90	35 to 70	229LT16	4	229LT26	5	229LT36	6
WR284	2.60-3.95	35 to 70	284LT16	4	284LT26	5	284LT36	6
WR430	1.70-2.60	40 to 70	430LT16	7	430LT26	8		
				4	430LT46	5	430LT56	6
WR650	1.12-1.70	40 to 70	650LT16	7	650LT26	8		
				4	650LT46	5	650LT56	6

ELECTRICAL DATA

Frequency:	*Bandwidth to be specified.*
Coupling Value:	*To be specified.*
Coupling Sensitivity:	*Approximately +/- 1dB for 20% bandwidth.*
Directivity:	*25dB for 2% of the waveguide band* *20dB for 20% of the waveguide band* *15dB for coupling values < 30dB for 20% of the waveguide band.*
VSWR:	*Main arm: 1.05 max. typcial for coupling values greater than 30dB.*
Power:	*The main arm will handle approximately 90% of waveguide rating. The internal load in the loop will handle 5 watts average power at 25˚C.*
Output Connectors:	*WR90 to 112 SMA female WR137 to 2100 type "N" female.*

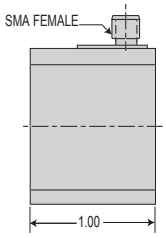

FIGURE 1

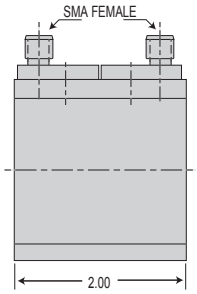

FIGURE 2

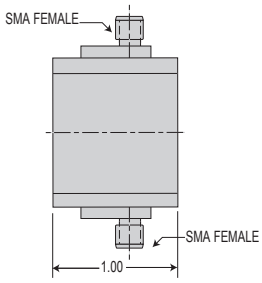

FIGURE 3

Flange faces equivalent to STD cover flange except tapped holes.

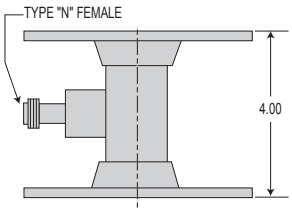

FIGURE 4

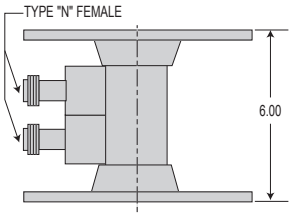

FIGURE 5

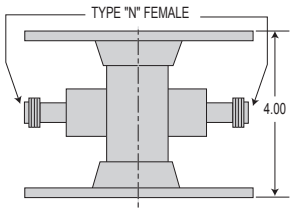

FIGURE 6

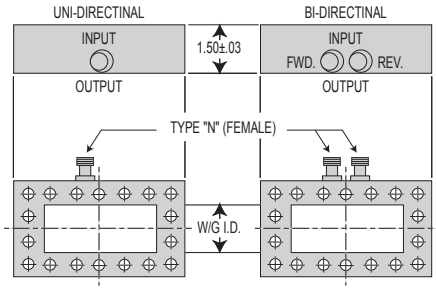

FIGURE 7 FIGURE 8

**All lengths as shown are for cover flanges only. When couplers are made with choke, cover or choke, choke lengths are greater.*

Branch Guide Couplers

These waveguide directional couplers offer characteristics which cannot be met by cross-guide, multi-aperture or slot typle couplers, especially in the 6-12dB coupling range. They are of very short length and can handle almost full waveguide peak-pulse power capacity. Full waveguide band-widths may be specified: but for flat coupling, the bandwidth should be limited to approximately 10 percent.

Computer aided design for specified paramenters enables MDL to reduce design and maunfacturing time and assure optimum performance. Mean coupling can be held to a tighter tolerance than for other types of couplers. Directivity is 20dB min. Repeatability in production is facilitated by new manufacturing techniques.

W/G SIZE	FREQ. RANGE (GHz)	MDL MODEL NO.			MEAN COUPLING- (dB)	VAR. FROM MEAN COUPLING (dB)	MECHANICAL DIMENSIONS				
		STYLE 1	STYLE 2	STYLE 3			STYLE 1	LENGTH STYLE 2	STYLE 3	A	B
WR62	15.50-18.00	62CB16	62CB316	62CB416	3.0±.3	±.2	2.00	5.65	4.43	1.20	.81
		62CB36	62CB336	62CB436	6.0±.4	±.2	2.00	5.65	4.43	1.20	.81
		62CB56	62CB356	62CB456	10.0±.5	±.2	2.00	5.65	4.43	1.20	.81
WR90	8.50-9.60	90CB16	90CB316	90CB416	3.0±.3	±.3	2.50	6.00	4.00	2.00	.80
		90CB36	90CB336	90CB436	6.0±.4	±.3	2.50	6.00	4.00	2.00	.80
		90CB56	90CB356	90CB456	10.0±.5	±.3	2.50	6.00	5.00	2.00	.80
WR112	7.50-8.50	112CB16	112CB316	112CB416	3.0±.3	±.2	3.00	8.00	6.00	2.50	1.19
		112CB36	112CB336	112CB436	6.0±.4	±.2	3.00	8.00	6.00	2.50	1.19
		112CB56	112CB356	112CB456	10.0±.5	±.2	3.00	8.00	6.00	2.50	1.19
WR137	5.90-6.60	137CB16	137CB316	137CB416	3.0±.3	±.2	4.00	11.00	8.00	3.00	1.75
		137CB36	137CB336	137CB436	6.0±.4	±.2	4.00	11.00	8.00	3.00	1.75
		137CB56	137CB356	137CB456	10.0±.5	±.2	4.00	11.00	8.00	3.00	1.75
WR159	5.00-5.90	159CB16	159CB316	159CB416	3.0±.3	±.4	4.50	12.00	10.00	3.25	1.50
		159CB36	159CB336	159CB436	6.0±.4	±.5	4.50	12.00	10.00	3.25	1.50
		159CB56	159CB356	159CB456	10.0±.5	±.4	4.50	12.00	10.00	3.25	1.50
WR187	5.30-6.10	187CB16	187CB316	187CB416	3.0±.3	±.2	5.00	14.00	12.00	3.25	2.32
		187CB36	187CB336	187CB436	6.0±.4	±.2	5.00	14.00	12.00	3.25	2.32
		187CB56	187CB356	187CB456	10.0±.5	±.2	5.00	14.00	12.00	3.25	2.32
WR229	3.70-4.20	229CB16	229CB316	229CB416	3.0±.3	±.2	6.10	18.00	12.00	3.50	1.50
		229CB36	229CB336	229CB436	6.0±.4	±.3	6.10	18.00	12.00	3.50	1.50
		229CB56	229CB356	229CB456	10.0±.5	±.2	6.10	18.00	12.00	3.50	1.50
WR284	2.70-3.05	284CB16	284CB316	284CB416	3.0±.3	±.3	8.00	24.00	12.35	5.00	2.60
		284CB36	284CB336	284CB436	6.0±.4	±.3	8.00	24.00	12.35	5.00	2.60
		284CB56	284CB356	284CB456	10.0±.5	±.3	8.00	24.00	12.35	5.00	2.60

**Cross-guide couplers are available for loose coupling values only, and multi-aperture couplers are too lengthy for tight couplings. Short slot couplers, while capable of handling high power are usually available only in the 3.5 dB range. With reduced bandwidths the directivity can be greater than 30 dB.*

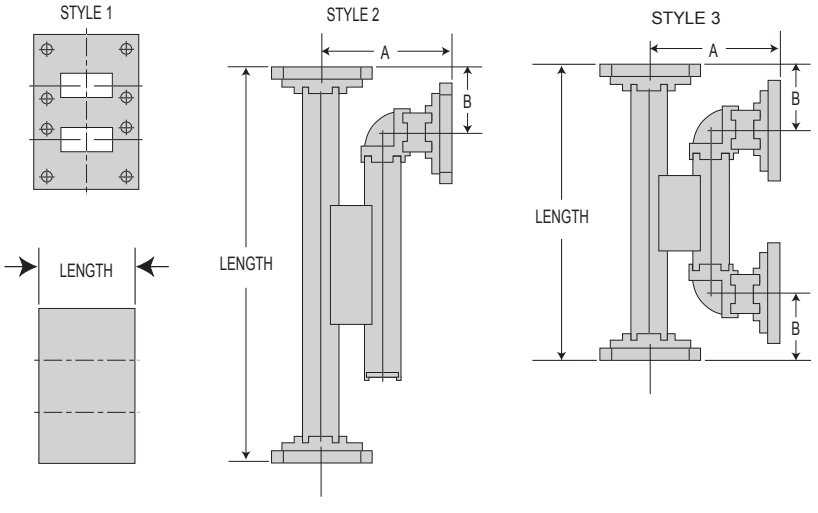

Broadwall couplers

W/G SIZE FREQ. RANGE (GHz)	MDL MODEL NUMBERS	MEAN COUPLING (dB) *	VAR. FROM MEAN COUPLING vs FREQ. (dB)	DIRECT-IVITY (dB min)	STYLE *	MECHANICAL DIMENSIONS (INCHES) LGT.	A	B	INPUT TERMINAL FLANGES EQUIVALENT TO
Multihole									
WR51	51CT16-1	3	±0.5	30	1	6.00	1.14	0.81	51FA52 (1.13 x 1.31 cover flange with four 0.144 dia. holes.)
15.00-22.00	51CT26-1	6	±0.5	30	1	5.62	1.14	0.81	
	51CT36-1	10	±0.5	30	1	5.25	1.14	0.81	
	51CT46-1	20	±0.5	30	1	4.87	1.14	0.81	
	51CT56-1	30	±0.5	30	1	4.87	1.14	0.81	
WR62	62CT16-1	3	±0.5	30	1	7.00	1.20	0.81	UG419/U UG1665/U
12.40-18.00	62CT26-1	6	±0.5	30	1	6.50	1.20	0.81	
	62CT36-1	10	±0.5	30	1	6.00	1.20	0.81	
	62CT46-1	20	±0.5	30	1	5.50	1.20	0.81	
	62CT56-1	30	±0.5	30	1	5.50	1.20	0.81	
WR75	75CT16-1	3	±0.5	25	1	8.25	1.50	0.80	75FA22 (1.50x1.50-cover flanges with four 6-32 threads.)
10.00-15.00	75CT26-1	6	±0.5	25	1	7.50	1.50	0.80	
	75CT36-1	10	±0.5	25	1	7.00	1.50	0.80	
	75CT46-1	20	±0.5	25	1	6.50	1.50	0.80	
	75CT56-1	30	±0.5	25	1	6.50	1.50	0.80	
WR90	90CT86-1	3	±0.5	30	1	9.25	1.53	0.80	UG39/U, UG135/U except 8-32 threads
8.20-12.40	90CT96-1	6	±0.5	30	1	8.50	1.53	0.80	
	90CT106-1	10	±0.5	30	1	7.75	1.53	0.80	
	90CT116-1	20	±0.5	30	1	7.25	1.53	0.80	
	90CT126-1	30	±0.5	30	1	7.25	1.53	0.80	
	90CT136-1	40	±0.5	30	1	7.25	1.53	0.80	
WR102	102CT16-1	3	±0.6	30	1	11.00	1.78	0.90	UG1493/U except 8-32 threads
7.05-11.00	102CT26-1	6	±0.6	30	1	10.25	1.78	0.90	
	102CT36-1	10	±0.6	30	1	9.50	1.78	0.90	
	102CT46-1	20	±0.6	30	1	8.75	1.78	0.90	
	102CT56-1	30	±0.6	30	1	8.75	1.78	0.90	
	102CT86-1	10	±0.7	40	2	15.50	1.78	1.00	
	102CT96-1	20	±0.7	40	2	15.50	1.78	1.00	
WR112	112CT86-1	3	±0.4	30	1	12.00	1.75	1.19	UG51/U, UG138/U except 8-32 threads
7.00-10.00	112CT96-1	6	±0.4	30	1	11.00	1.75	1.19	
	112CT106-1	10	±0.4	30	1	10.00	1.75	1.19	
	112CT116-1	20	±0.4	30	1	9.50	1.75	1.19	
	112CT126-1	30	±0.4	30	1	9.50	1.75	1.19	
	112CT136-1	40	±0.4	30	1	9.50	1.75	1.19	
WR137	137CT16-1	3	±0.5	30	1	15.00	2.38	1.75	UG441/U, UG344/U
5.40-8.20	137CT26-1	6	±0.5	30	1	14.00	2.38	1.75	
	137CT36-1	10	±0.5	30	1	13.00	2.38	1.75	
	137CT46-1	20	±0.5	30	1	12.00	2.38	1.75	
	137CT56-1	30	±0.5	30	1	12.00	2.38	1.75	

**Style 1 not available with choke flange on input terminal*

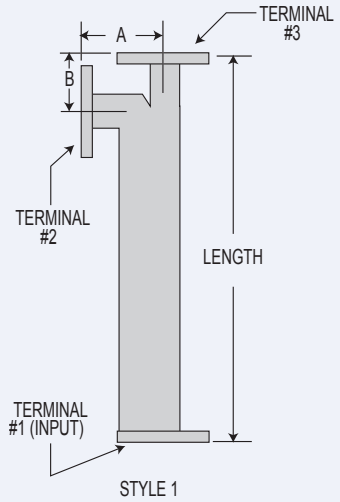

STYLE 1

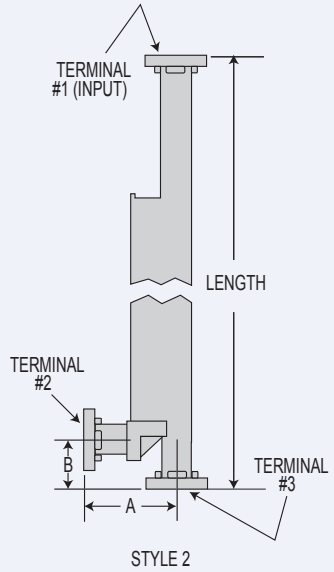

STYLE 2

When ordering Style 2, contact factory for length.

Broadwall couplers

MULTIHOLE COMPENSATED

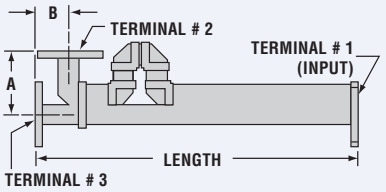

Multihole Compensated

MDL's broadwall compensated directional couplers feature minimum coupling variation with frequency – making them ideal for use in leveling circuits and broadband power monitoring. In contrast to most broadwall couplers, in which variation from mean coupling is ±0.5 dB over a waveguide bandwidth, MDL's new compensated directional couplers reduce variation from mean coupling to only ±0.2 to ±0.3 dB.

W/G SIZE FREQ. RANGE (GHz)	MDL MODEL NUMBERS	MEAN COUPLING (dB)	VAR. FROM MEAN COUPLING vs FREQ. (dB)	DIRECT-IVITY (dB min)	MAIN ARM	SECOND ARM	MECHANICAL DIMENSIONS (INCHES) LGT.	A	B	INPUT TERMINAL FLANGES EQUIV TO†
WR62 12.40-18.00	62FC16-1	20 ± 0.50	±0.20	25	1.08	1.25	8.00	1.20	0.81	UG419/U
WR90	90FC86-1	3 ± 0.40	±0.20	30	1.10	1.25	11.50	1.53	0.80	UG36/U
8.20-12.40	90FC106-1	10 ± 0.40	±0.20	30	1.08	1.20	10.00	1.53	0.80	UG135/U
	90FC176-1	17 ± 0.40	±0.20	30	1.08	1.20	10.00	1.53	0.80	except 8-32 thread
WR102 7.00-11.00	102FC106-1	10 ± 0.40	±0.30	25	1.08	1.20	12.00	1.78	0.90	UG1493/U except 8-32 thread

† Terminal 1 (input) not available with choke flanges.

MULTIHOLE HIGH DIRECTIVITY

Multihole High Directivity

MDL high directivity couplers are made using broached waveguides. Walls on the waveguide are extremely thick to prevent changes in characteristics caused by physical distortion. The electrical design assures a minimum directivity of at least 45 dB and typically 50 dB over the entire band, making possible the design of high performance reflectometers: These couplers available with cover flanges only. Material aluminum only.

W/G SIZE FREQ. RANGE (GHz)	MDL MODEL NUMBERS	MEAN COUPLING (dB)	VAR. FROM MEAN COUPLING vs FREQ. (dB)	DIRECTIVITY (dB min)	MECHANICAL DIMENSIONS (INCHES) LGT.	A	B
WR90 8.20-12.40	90CT336-1	10 ± 0.40	±0.50	50	13.62	1.25	0.80

Narrow-wall couplers

W/G SIZE	FREQ. RANGE (GHz)	MDL MODEL NUMBERS	MEAN COUPLING (dB)	VAR. FROM MEAN COUPLING vs FREQ. (dB)	PEAK POWER MAIN ARM (KW)	DIRECT-IVITY (dB min)	MECHANICAL DIMENSIONS (INCHES) LGT.	A	B	C	INPUT TERMINAL FLANGES EQUIV. TO
Multihole											
WR90	8.20-12.40	90CS136-1	10 ± 0.7	±1.5	200	30	11.50	0.95	0.90	1.60	UG39/U UG135/U
		90CS146-1	20 ± 0.7	±1.5	200	30	10.25	0.95	0.90	1.60	
		90CS156-1	30 ± 0.7	±1.5	200	30	10.25	0.95	0.90	1.60	
	8.50-10.50	90CS76-1	10 ± 1.0	Included in mean coupling	200	25	8.25	0.95	0.90	1.60	
		90CS86-1	20 ± 1.0		200	25	8.25	0.95	0.90	1.60	
		90CS96-1	30 ± 1.0		200	25	8.25	0.95	0.90	1.60	
WR112	8.50-9.60	112CS106-1*	30 ± 1.0	Included in mean coupling	350	25	7.00	1.06	0.90	1.60	Main arm: UG51/U UG138/U Secondary arm: UG39/U UG135/U
		112CS116-1*	40 ± 1.0		350	25	7.00	1.06	0.90	1.60	
		112CS126-1*	50 ± 1.0		350	25	7.00	1.06	0.90	1.60	
	7.05-10.00	112CS66-1	10 ± 0.7	±1.5	350	30	12.75	1.17	1.00	2.00	
		112CS76-1	20 ± 0.7	±1.5	350	30	11.25	1.17	1.00	2.00	UG138/U UG51/U
		112CS86-1	30 ± 0.7	±1.5	350	30	11.25	1.17	1.00	2.00	
WR137	6.50-8.00	137CS16-1	10 ± 1.0	-	500	25	16.50	1.44	1.80	2.30	UG441/U UG344/U
		137CS26-1	20 ± 1.0	-	500	25	16.50	1.44	1.80	2.30	

**WR90 waveguide in the auxiliary arm. Auxiliary arm load: 3 watts average.*

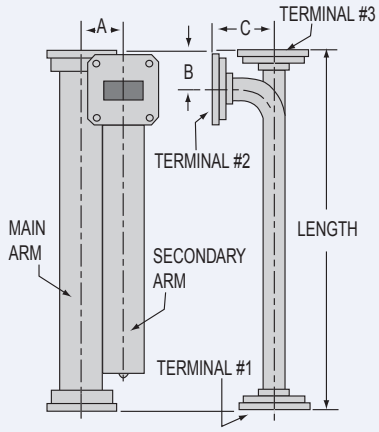

Note: External detail may differ slightly. WR90 to WR137

Section 6

Power Dividers

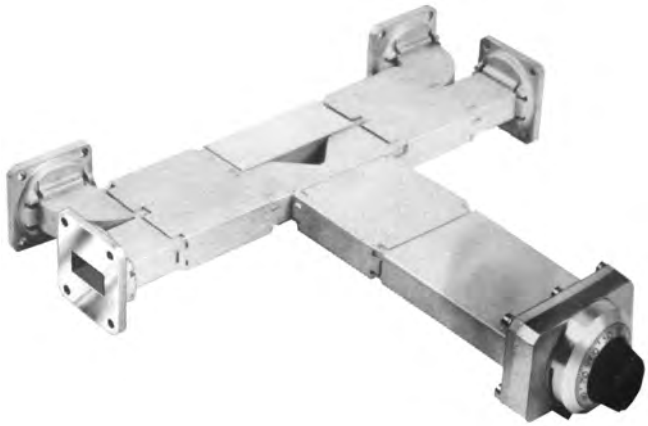

Introduction

MDL variable power dividers are widely used in resonant rings, and can serve as attenuators, particularly where high power is involved. Their peak power handling capacity (without additional pressure) ranges from 18KW in WR28 to 2.5MW in WR284. For applications requiring high average power, provisions can be made for water cooling. The power division is not inherently linear with frequency: however, calibrations can be supplied for specified frequencies. All models may be modified mechanically or electrically to meet customers' special requirements.

Power Dividers

W/G SIZE	FREQ. RANGE	MDL MODEL NUMBER	DIMENSIONS A	B	C	D (REF.)	*TERMINATIONS (EQUIVALENT TO)
WR28	34.0-36.0	28CV26	4.05	4.79	1.10	4.90	UG-599/U
WR42	19.0-21.0	42CV16	4.43	5.46	1.29	5.24	UG-597/U
WR62	15.5-17.0	62CV16	5.59	6.91	1.63	5.15	UG-1655/U
	12.4-14.0	62CV26	5.54	6.86	1.58	5.42	UG-1665/U
	14.2-15.2	62CV36	5.54	6.86	1.58	5.54	UG-1665/U
WR90	8.5-9.6	90CV66	7.95	9.57	2.26	7.42	UG-135/U
WR112	8.5-9.6	112CV26	9.77	11.65	2.62	8.25	UG138/U
	7.5-8.5	112CV36	10.22	12.10	2.71	8.44	UG138/U
WR137	5.4-5.9	137CV26	12.66	15.79	3.44	10.62	UG441/U
	5.8-6.5	137CV36	12.41	15.79	3.44	10.51	UG441/U
	6.1-6.9	137CV46	12.41	15.79	3.44	10.51	UG441/U
WR187	5.4-5.9	187CV26	16.12	19.73	4.96	11.50	UG407/U
	4.4-5.0	187CV36	15.48	19.74	4.34	14.00	UG407/U
WR284	2.85-3.15	284CV46	27.00	32.31	6.62	20.06	UG584/U
	2.66-2.99	284CV56	27.00	32.31	6.62	21.15	UG584/U

Notes:

1. *Tolerances:*
   ± .020 WR28, WR42, WR62, WR90, WR112
   ± .030 WR137
   ± .040 WR187, WR284
2. *Attenuation: (port 1 to port 3, and port 1 to port 4): 28 db minimum*
3. *Insertion loss: (port 1 to port 3, and port 1 to port 4): 0.25 db maximum (except MDL model 42CV16=0.30 db maximum, and 28CV26=.035 db maximum)*
4. *VSWR: (port 1): 1.25 maximum*
5. *Isolation: (port 1 to port 2): 18.0 db minimum.*
6. *Material: Aluminum alloy standard, copper alloy available on special request.*
7. *Finish: Aluminum models are chromated and painted MDL blue.*
8. *Cover flanges are standard, however, modifications are available upon request.*
9. *Drive: WR28 & WR42 have micrometer drives. WR62 thru WR284 have dial pot drives as shown.*

POWER DIVIDERS

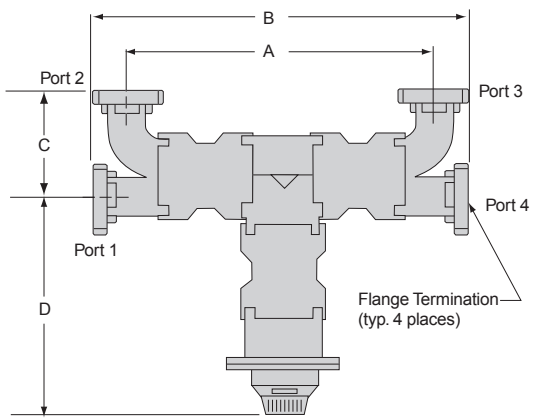

Section 7

Variable Attenuators

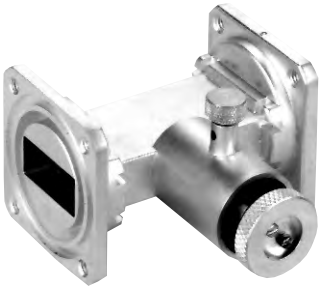

Introduction

MDL's series of Topwall and Sidewall variable attenuators feature low VSWR and insertion loss over the entire waveguide band. Attenuation is accomplished by moving an adjustable resistance cord through the waveguide. The units are of compact design and utilize a unique drive mechanism which gives an expectionally smooth travel.

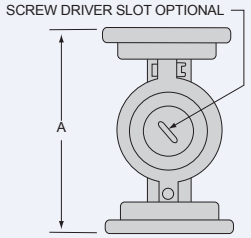

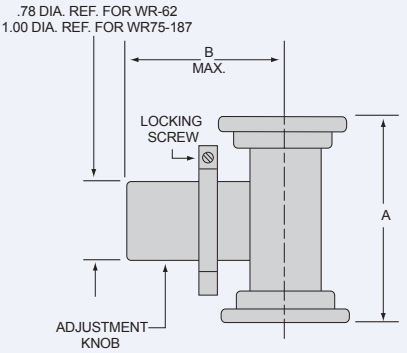

Variable Attenuators

Sidewall Variable Attenuators

W/G SIZE	FREQ. RANGE (GHz)	MDL MODEL NUMBER	DIMENSIONS (INCHES) A	B (MAX.)	VSWR	INSERTION LOSS (dB)	ATTENUATION 20 dB (MIN.)
WR62	12.40-18.00	62AS56	2.00	1.62	1.15	.5	20
WR75	10.00-15.00	75AS26	2.25	2.12	1.15	.5	20
WR90	8.20-12.40	90AS66	2.50	2.25	1.15	.5	20
WR102	7.00-11.00	102AS26	3.00	2.31	1.15	.5	20
WR112	7.05-10.00	112AS36	3.50	2.37	1.15	.5	20
WR137	5.85-8.20	137AS26	4.00	2.62	1.15	.5	20
WR187	3.95-5.85	187AS26	5.00	3.18	1.15	.5	20

Notes:

1. *Material: Aluminum alloy standard, copper alloy available on special request.*
2. *Finish: Aluminum models are chromated.*
3. *Flanges: Cover flanges are supplied as standard. Chokes available on special request.*

Variable Attenuators

Topwall Drive Variable Attenuators

- Resistance-card drive assembly can be removed quickly by loosening two screws.
- Complete drive mechanism accessible through top of attenuator housing.
- Attenuator housing available separately for brazing to any waveguide.
- Curves demonstrating typical attenuation may be supplied on request.

W/G SIZE	FREQ. RANGE (GHz)	PEAK POWER (WATTS)	AVERAGE POWER (WATTS)	VSWR MAX. (0-15 dB)	ATTENUATION RANGE (dB MIN.)
WR28	26.50-40.00	25	0.20	1.4	0.5-25
WR42	18.00-26.50	50	0.30	1.4	0.5-20
WR51	15.00-22.00	60	0.40	1.4	0.5-15
WR62	12.40-18.00	75	0.50	1.4	0.5-15
WR75	10.00-15.00	150	1.00	1.4	0.5-15
WR90	8.20-12.40	150	1.00	1.4	0.5-20
WR102	7.00-11.00	250	1.25	1.4	0.5-15
WR112	7.00-10.00	275	1.75	1.4	0.5-15
WR137	5.40-8.20	350	2.25	1.4	0.5-15
WR159	4.90-7.00	500	3.50	1.4	0.5-15
WR187	4.00-6.00	600	4.00	1.4	0.5-15

Notes:

1. *Material: Aluminum alloy standard, copper alloy available on special request.*
2. *Finish: Aluminum models are chromated and painted MDL blue unless otherwise specified.*

Variable Attenuators

W/G SIZE	FREQ. RANGE (GHz)	MDL MODEL NUMBER	PEAK POWER (WATTS)	AVERAGE POWER (WATTS)	VSWR MAX. (0-15 dB)	ATTENUATION RANGE (dB MIN.)	DIMENSIONS (INCHES) TOLERANCE.XX = ±0.2 A	B	C	FIG. NO.
WR28	26.50-40.00	28AT16-1	25	0.20	1.4	0.5-25	1.19	0.72	0.14	1
		28AT16-2					1.19	0.72	0.14	1
		28AT16-4					1.19	0.72	0.14	1
WR42	18.00-26.50	42AT16-1	50	0.30	1.4	0.5-20	1.29	0.75	0.14	1
		42AT16-2					1.29	0.75	0.14	1
		42AT16-4					1.29	0.75	0.14	1
WR51	15.00-22.00	51AT13	60	0.40	1.4	0.5-15	1.10	0.96	0.14	2
		51AT16-1					1.25	0.80	0.14	1
		51AT16-2					1.46	0.80	0.14	1
		51AT16-4					1.56	0.80	0.14	1
WR62	15.00-22.00	62AT13	75	0.50	1.4	0.5-15	1.25	0.83	0.14	2
		62AT23					0.82	0.83	0.14	2
		62AT33					1.03	0.83	0.14	2
		62AT16-1					1.16	0.83	0.14	1
		62AT16-2					1.34	0.83	0.14	1
		62AT16-4					1.53	0.83	0.14	1
WR75	1 15.00-22.00	75AT16-1	150	1.00	1.4	0.5-15	2.43	0.94	0.20	1
		75AT16-2					2.43	0.94	0.20	1
		75AT16-4					2.43	0.94	0.20	1
		75AT13					1.70	0.95	0.20	3
WR90	8.20-12.40	90AT23	150	1.00	1.4	0.5-20	2.69	0.95	0.20	2
		90AT83					2.13	0.95	0.20	2
		90AT53					1.57	0.95	0.20	2
		90AT46-1					1.87	0.95	0.20	1
		90AT36-1					2.69	0.95	0.20	1
		90AT36-2					2.69	0.95	0.20	1
		90AT36-4					2.69	0.95	0.20	1
		90AT73					1.70	1.10	0.20	3
WR102	7.00-11.00	102AT16-1	250	1.25	1.4	0.5-15	2.74	1.18	0.18	1
		102AT16-2					2.96	1.18	0.18	1
		102AT16-4					3.17	1.18	0.18	1
		102AT13					2.27	0.84	0.18	4
WR112	7.00-10.00	112AT16-1	275	1.75	1.4	0.5-15	2.67	1.17	0.18	1
		112AT16-2					3.06	1.17	0.18	1
		112AT16-4					3.25	1.17	0.18	1
		112AT13					2.27	0.84	0.18	4
WR137	5.40-8.20	137AT16-1	350	2.25	1.4	0.5-15	2.83	1.36	0.18	1
		137AT16-2					3.30	1.36	0.18	1
		137AT16-4					3.67	1.36	0.18	1
		137AT13					2.27	0.84	0.18	4
WR159	4.90-7.00	159AT16-1	500	3.50	1.4	0.5-15	3.78	1.69	0.18	1
		159AT16-2					4.15	1.69	0.18	1
		159AT16-4					4.53	1.69	0.18	1
		159AT13					2.99	0.84	0.18	4
WR187	4.00-6.00	187AT13	600	4.00	1.4	0.5-15	2.99	0.84	0.18	4
		187AT16-1					3.56	1.73	0.18	1
		187AT16-2					4.00	1.73	0.18	1
		187AT16-4					4.53	1.73	0.18	1

Variable Attenuators

FIGURE 1

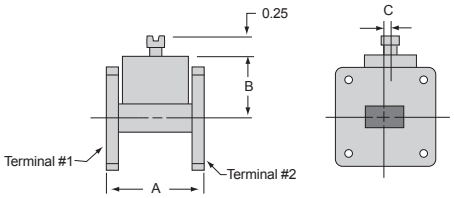

FIGURE 4

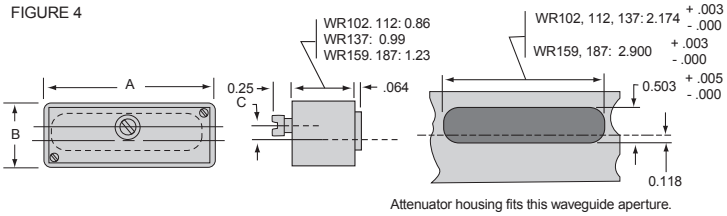

FIGURE 2

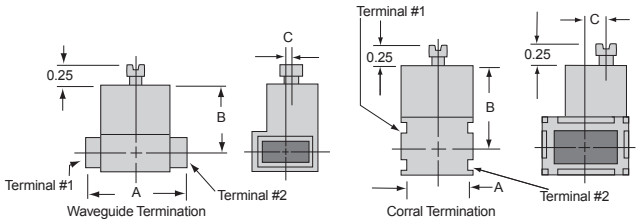

FIGURE 3

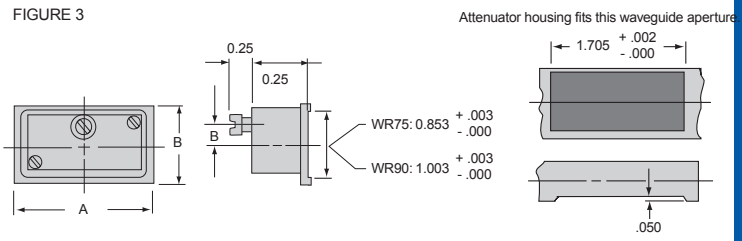

Notes:

1. *Material: Aluminum alloy, copper available on request.*
2. *Cover flanges are standard. Chokes available on special request.*
3. *Finish: Aluminum chromated.*

Section 8

Pads & Fixed Attenuators

Introduction

MDL offers compact attenuator pads having excellent electrical characteristics. They are particularly useful where space is a critical factor.

These units, in EIA waveguide sizes WR28 through WR90, span the frequency range from 8.5-37.0 GHz with attenuation from 10 to 50 dB. As shown, these attenuator pads are available as elements which can be inserted into a waveguide, or they can be built into a length of waveguide with choke or cover flanges on either end.

Ordering Information*

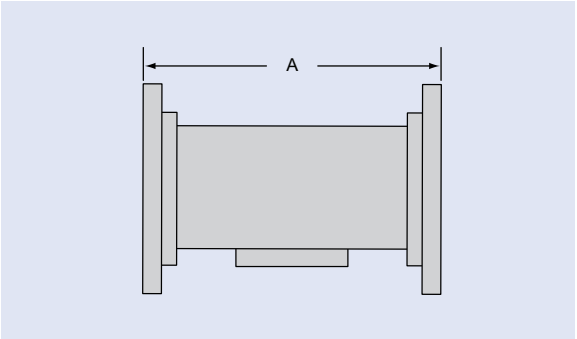

Example: 62ASF16-1-E-20-10P

MODEL NUMBER	FLANGE	MATERIAL	ATTENUATION	PRESSURE
62ASF16 -	1 -	E -	20 -	10P

Flange Termination - 2 Flanges

Flange	Port 1	Port 2
1	Cover	Cover
2	Cover	Choke
3	Choke	Cover
4	Choke	Choke

When using choke flanges, add the thickness of the flanges to the overall dimensions. Check with factory for final dimensions

Material and Finish

Code	Material	Finish
C	Aluminum Alloy	Chromated
D	Copper Alloy	Silver Plated
E	Aluminum Alloy	Chromated and Painted Blue
F	Copper Alloy	Silver Plated and Painted Blue

Attenuation

Number indicates fixed attenuation setting in dB

Pressurized for 20PSIG.
Number indicates desired pressure

For non-pressurized, omit numerals and "P".

** MDL reserves the right to discontinue or change specifications without notice.*

Pads & Fixed Attenuators

Sidewall Fixed Attenuators

MDL series of sidewall fixed attenuators have the size and reliability of the sidewall variable attenuators. Modifications of these models are available to meet special customer requirements.

W/G SIZE	FREQ. RANGE (GHz)	MDL MODEL NUMBER	VSWR MAX. (0-15dB)	ATTENUATION RANGE (dB MIN.)	LENGTH (INCHES) "A" ±0.20
WR62	12.4-18.0	62ASF16	1.15	1.0-20.0	2.00
WR75	10.0-15.0	75ASF16	1.15	1.0-20.0	2.25
WR90	8.2-12.4	90ASF16	1.15	1.0-20.0	2.50
WR102	7.0-11.0	102ASF16	1.15	1.0-20.0	3.00
WR112	7.05-10.0	112ASF16	1.15	1.0-20.0	3.50
WR137	5.85-8.20	137ASF16	1.15	1.0-20.0	4.00
WR187	3.95-5.85	187ASF16	1.15	1.0-20.0	5.00

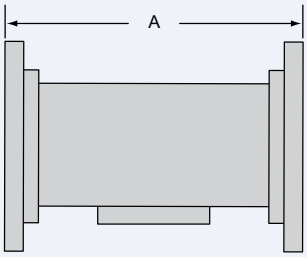

Pads

Pad Element

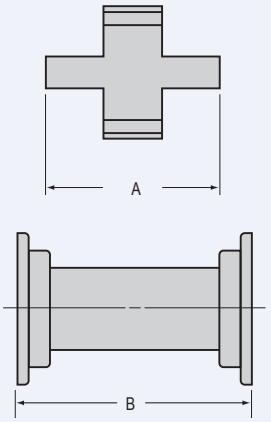

W/G SIZE	FREQ. RANGE (GHz)	MDL MODEL NUMBER	ATTENUATION dB (NOMINAL)	SENSITIVITY dB (MAX.)	VSWR (MAX.)	PAD ELEMENT A (MAX.)
WR28	31.0-37.0	28AF12	10±1	±0.50	1.20	0.50
	31.0-37.0	28AF22	20±1	±1.00	1.25	0.90
	31.0-37.0	28AF32	30±1	±1.00	1.25	1.40
WR62	15.5-17.5	62AF12	20±1	±0.50	1.15	0.60
	15.5-17.5	62AF22	30±1	±0.50	1.15	0.75
	15.5-17.5	62AF32	40±1	±1.00	1.15	0.95
WR75	10.0-15.0	75AF12	10±1	±1.00	1.50	0.75
WR90	8.5-10.5	90AF12	20±1	±0.50	1.20	1.05
	8.5-10.5	90AF22	30±1	±0.50	1.20	1.40
	8.5-10.5	90AF32	40±1	±0.50	1.20	1.75
	8.5-10.5	90AF42	50±1	±1.00	1.20	2.05

Attenuator with Pad in Waveguide

W/G SIZE	FREQ. RANGE (GHz)	MDL MODEL NUMBER	ATTENUATION dB (NOMINAL)	SENSITIVITY dB (MAX.)	VSWR (MAX.)	ATTENUATOR PAD "B" (+0.20)
WR28	31.0-37.0	28AF16	10±1	±0.50	1.20	0.70
	31.0-37.0	28AF26	20±1	±1.00	1.25	1.11
	31.0-37.0	28AF36	30±1	±1.00	1.25	1.60
WR62	15.5-17.5	62AF16	20±1	±0.50	1.15	1.00
	15.5-17.5	62AF26	30±1	±0.50	1.15	1.15
	15.5-17.5	62AF36	40±1	±1.00	1.15	1.35
WR75	10.0-15.0	75AF16	10±1	±1.00	1.50	1.15
WR90	8.5-10.5	90AF16	20±1	±0.50	1.20	1.45
	8.5-10.5	90AF26	30±1	±0.50	1.20	1.80
	8.5-10.5	90AF36	40±1	±0.50	1.20	2.15
	8.5-10.5	90AF46	50±1	±1.00	1.20	2.45

Section 9

Phase Shifters

Introduction

MDL hybrid phase shifters are generally used for high peak or average power experimental applications. They provide 360º of phase variation and are precisely adjustable and resettable.

MDL low-power dielectric phase shifters are available from WR28 through WR137 waveguide sizes, and are ideal as phase trimmers in monopulse applications. Their space-saving design also permits assembly of more variable phase shifters.

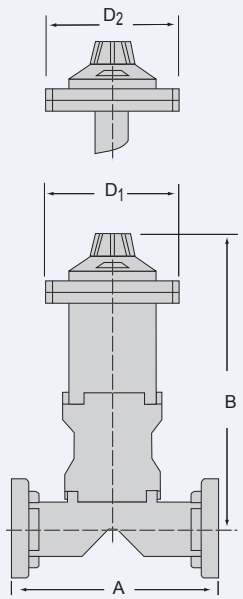

Phase Shifters

Hybrid Phase Shifters

The phase shift is approximately linear with dial rotation, but is not linear with frequency. As a result, calibration accuracy is limited to the particular frequency of the calibration. They can also be used in low power set-ups where ease of reset ability and compact physical configuration are desired.

These units maybe readily modified to meet customers' particular requirements. MDL hybrid phase shifters can be supplied pressure tight as well as with water cooling tubes for high average power.

W/G SIZE	FREQ. RANGE (GHz)	MDL MODEL NUMBER	DIMENSIONS A	B	C	D (REF.)
Hybrid Phase Shifters						
WR28	34.0-36.0	28PS16	1.93	4.90	1.39	1.27
WR42	19.0-21.0	42PS26	2.07	5.24	1.39	0.87
WR62	15.5-17.0	62PS46	2.62	5.40	1.77	1.33
	12.4-14.0	62PS56	2.62	5.36	1.77	1.33
	14.2-15.2	62PS36	2.62	5.15	1.77	1.33
WR90	8.5-9.6	90PS26	2.98	7.42	2.58	1.62
WR112	8.5-9.6	112PS66	4.27	8.25	3.22	1.37
	7.5-8.5	112PS76	4.35	8.44	3.22	1.37
WR137	5.4-5.9	137PS26	4.66	10.62	3.80	1.61
	5.8-6.5	137PS46	4.66	10.62	3.80	1.61
	6.1-6.9	137PS36	4.66	10.62	3.80	1.61
WR187	5.4-5.9	187PS46	5.75	11.50	5.03	2.03
	4.4-5.0	187PS56	5.79	13.91	5.03	2.03
WR284	2.85-3.15	284PS46	10.25	20.06	7.22	2.72
	2.66-2.99	284PS56	10.25	21.15	7.22	2.72

Notes:

1. *Tolerances:*
   ± .020 WR28, WR42, WR62, WR90, WR112
   ± .030 WR137
   ± .040 WR187, WR284
2. *Attenuation: (port 1 to port 3, and port 1 to port 4): 28db minimum*
3. *Material: Aluminum alloy standard, copper alloy available on special request.*
4. *Finish: Aluminum models are chromated.*
5. ** Flanges: Cover flanges are supplied. Other types of flanges are available upon request.*
6. *Drive: WR28 & WR42 have micrometer drives. WR62 thru WR284 have dial pot drives as shown.*
7. *Electrical Specifications-*
   Phase Shift: 360º min
   VSWR: 1.20:1 max. (except MDL models 28PS16-1 & 42PS26-1 which are 1.25:1 max.)
   Insertion Loss: 0.25 dB max. (except MDL models 62PS36-1, 62PS46-1, 62PS56-1, 42PS26-1 & 28PS16-1 which are 0.30 dB max.)
   Peak Power: Approx. 18 kilowatts in WR28 to approx. 2.0 megawatts in WR284 at sea level. Higher powers can be handled with additional air pressure.

Phase Shifters

Low Loss Dielectric Phase Shifters

W/G SIZE	FREQ. RANGE	MODEL NUMBER	DIMENSIONS (INCHES) (TOL*± .020) A	B	C	FIG.	VSWR (MAX.)	VARIABLE PHASE SHIFT (DEGREES) 0 TO MIN.	INSERTION LOSS (dB MAX.)
WR28	33.0-37.0	28PE16	1.20	0.98	0.14	3	1.20	90	0.25
WR42	22.5-24.0	42PE16	1.30	1.02	0.14	3	1.20	90	0.25
WR51	15.5-17.0	51PE16	1.87	1.20	0.16	1	1.15	90	0.30
	15.5-17.0	51PE26	2.85	1.20	0.16	1	1.15	180	0.30
WR62	15.5-17.0	62PE26	2.20	1.20	0.16	1	1.20	90	0.30
	15.5-17.0	62EP36	3.20	1.20	0.16	1	1.20	180	0.30
	14.5-15.5	62EP56	3.20	1.20	0.16	1	1.20	180	0.20
	13.5-15.2	62EP66	3.00	1.23	0.16	1	1.25	180	0.30
WR75	10.0-11.0	75PE16	3.00	1.55	0.18	1	1.20	180	0.30
WR90	8.5-9.6	90PE26	3.00	1.56	0.16	3	1.15	180	0.10
	8.5-9.6	90PE86	3.00	1.54	0.16	3	1.15	180	0.10
	9.6-10.2	90PE76	2.99	1.56	0.16	3	1.20	180	0.25
WR112	7.4-8.5	112PE46	6.00	1.88	0.16	3	1.25	180	0.25
	8.5-9.6	112PE56	7.00	1.73	0.17	3	1.20	180	0.25
WR137	5.4-5.9	137PE16	8.00	3.32	-	2	1.15	180	0.10

Notes:

1. *Material: Aluminum alloy standard, copper available on request.*
2. *Flanges: Cover flanges.*
3. *Finish: Aluminum models chromated.*

FIGURE 1

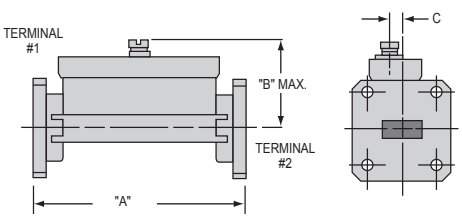

FIGURE 2

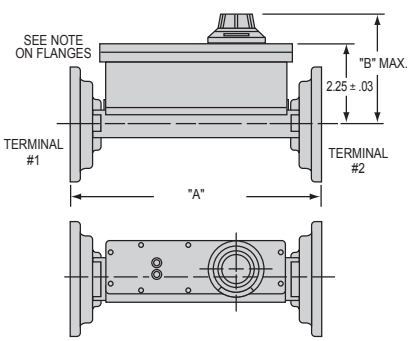

FIGURE 3

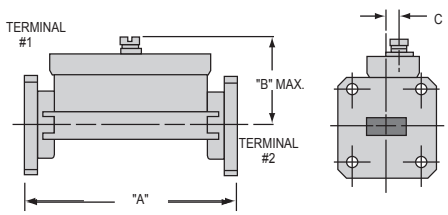

Section 10

Waveguide Pressure Windows

Introduction

The MDL teflon/fiberglass pressure windows provide a seal within waveguide systems while passing microwave energy freely. The maintained pressure ensures maximum performance, and the seal prevents entry of moisture, dirt, and dust.

The teflon/fiberglass pressure flange windows will not hold a vacuum seal. These windows are made of aluminum base material with an iridite finish but can be made of copper alloy material with a silver plated finish on a special order basis.

A safety factor is included in the power handling specifications of all MDL pressure windows.
All window surfaces are design-tested at atmospheric pressure with a one microsecond pulse at 1000pps repetition rate.

Pressure Windows waveguide

W/G SIZE	FREQ. RANGE (GHz)	MODEL NUMBER	MAX. VSWR	PEAK POWER (KW) ***	MAX. PRESSURE (PSIG) *	STYLE NO.	LENGTH A	FRAME WIDTH B	THICKNESS C
	ELECTRICAL DATA						MECHNICAL DATA		
Flange Windows									
WR28	26.5-40.0	28WT16	1.15	45	30/20	2	0.75	0.75	0.06
	34.0-36.0	28WT26	1.06	45	30/20	2	0.75	0.75	0.06
WR34	22.0-33.0	34WT16	1.15	50	30/20	2	0.87	0.87	0.06
WR42	18.0-26.0	42WT16	1.15	60	30/20	2	0.87	0.87	0.06
WR51	15.0-22.0	51WT16	1.10	100	45/45	2	1.31	1.31	0.12
WR62	12.4-18.0	62WT16	1.10	150	45/45	2	1.31	1.31	0.12
		62WT46	1.10	150	45/45	2	1.31	1.31	0.12
WR75	10.0-15.0	75WT16	1.10	300	45/45	2	1.50	1.50	0.12
WR90	8.2-12.4	90WT36-1	1.10	500	45/45	2	1.62	1.62	0.12
		90WT36-2	1.10	500	45/45	2	1.62	1.62	0.12
		90WT36-3	1.12	500	45/45	2	1.62	1.62	0.19
	10.2-10.6	90WT46	1.08	500	45/45	2	1.62	1.62	0.12
	8.2-12.4	90WT56•	1.10	500	45/45	2	1.62	1.62	0.37
	8.2-11.0	CPR90WT16	1.10	300	30/30	1	2.09	1.59	0.12
	8.2-12.4	90WT16	1.10	300	45/45	2	1.62	1.62	0.12
	8.5-9.6	90WT26	1.08	300	45/45	2	1.62	1.62	0.12
	8.2-12.4	90WT66ϕ	1.10	500	45/45	2	1.62	1.62	0.75
WR102	7.05-11.0	102WT16	1.10	800	45/45	2	1.68	1.68	0.12
WR112	7.05-10.0	CPR112WT16	1.10	500	30/30	1	2.50	1.75	0.12
	8.5-9.6	112WT26	1.08	500	45/45	2	1.87	1.87	0.12
	7.05-10.0	112WT16	1.10	500	45/45	2	1.87	1.87	0.12
WR137	5.85-8.2	137WT16	1.10	1000	45/45	3	3.12 Dia.		0.18
		CPR137WT16	1.10	1000	30/30	1	2.69	1.94	0.19
WR187	3.95-5.85	187WT16	1.10	1500	45/45	3	3.62 Dia.		0.25
		CPR187WT16	1.10	1500	30/30	1	3.50	2.50	0.25
WR229	3.3-4.9	CPR229WT16	1.10	1750	30/30	1	3.88	2.75	0.25
WR284	2.6-3.95	284WT16	1.10	2000	45/45	3	5.31 Dia.		0.25
		CPR284WT16	1.10	2000	45/45	1	4.50	3.00	0.25

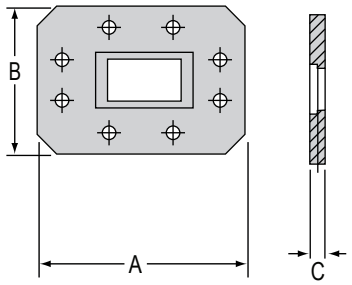

STYLE 1

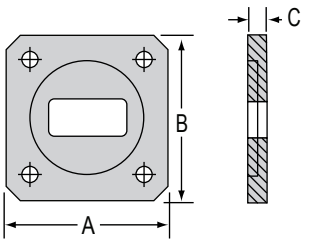

STYLE 2

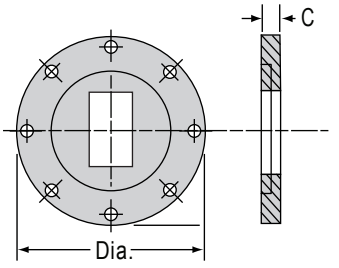

STYLE 3

Notes: * *The higher number indicates maximum pressure applied to the insert side of the window.*
The other number is the max. pressure applied to the opposite side of the window provided the insert side is supported by a cover flange.

• *Choke/flat window adapter.*
Flange configuration other than those shown are available on special order.

ϕ *Choke/choke window adapter.*

∅ *Nominal, .xx = 0.020 inches.*

** *90WT36 groove equivalent to WR90 choke "O" ring groove.*
MOD 1 with groove on insert side.
MOD 2 with groove on flat side.
MOD 3 with groove on both sides

*** *Duty cycle .001*

Section 11

Waveguide to Coax Adapters

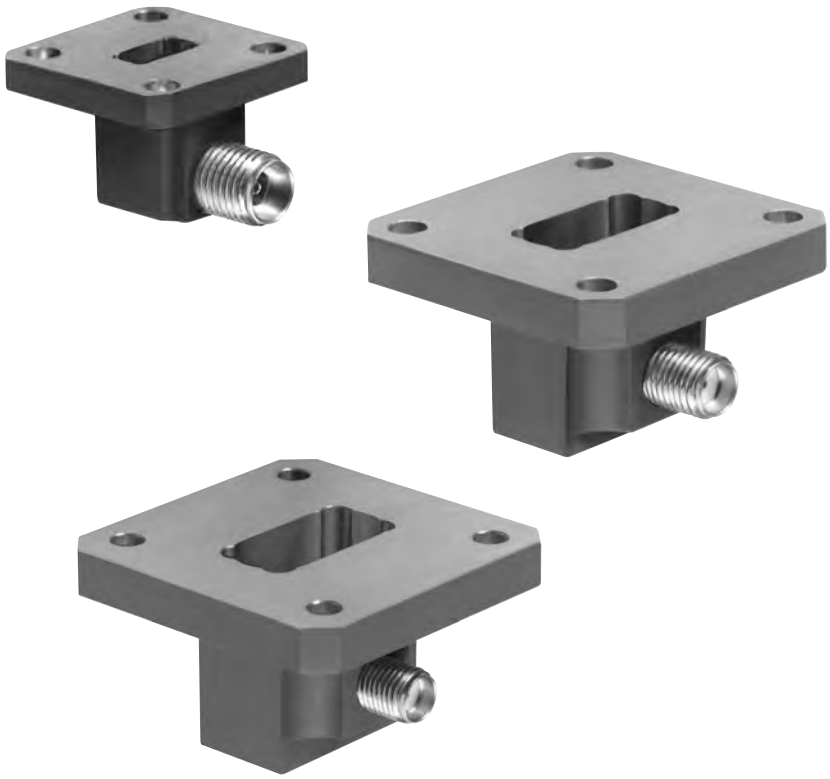

Introduction

Microwave Development Laboratories waveguide to coaxial adapters cover the frequency spectrum from WR650 to WR22. Female and male type “N”, SMA and 2.9mm connectors are available. All connectors are constructed of stainless steel for long wear and improved electrical performance. Standard adapters typically have a 1.25 max. VSWR. Low VSWR adapters are typically 1.065 max. and 1.10 max. for pressurized units.

Ordering Information*

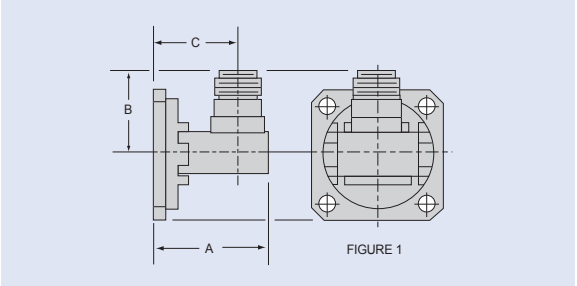

Example: 90AC126-1-E

MODEL NUMBER FLANGE MATERIAL

90AC126 - 1 - E

Flange Termination - 2 Flanges

Flange	Port 1
1	Cover
2	Choke

Material and Finish

Code	Material	Finish
C	Aluminum	Chromated
D	Brass	Silver Plated
E	Aluminum Alloy	Chromated and Painted Blue
F	Brass	Silver Plated per QQ-S-365 type II and painted blue

** MDL reserves the right to discontinue or change specifications without notice.*

Waveguide to Coax Adapters

Type N Standard Adapters

VSWR is 1.25 maximum.

FREQ. RANGE GC/SEC.	MDL MODEL NUMBER	FIG.	DIMENSIONS "A" MAX.	"B" MAX.	"C" +.020
10.00-15.00	75AC46*	1	1.20	1.00	0.87
	75AC56*	2	1.20	1.09	0.87
8.20-12.40	90AC46*	1	1.15	1.02	0.88
	90AC56*	2	1.15	1.11	0.88
7.00-11.00	102AC46*	1	1.40	1.08	1.06
	102AC56*	2	1.40	1.17	1.06
7.05-10.00	112AC46*	1	1.40	1.07	1.06
	112AC56*	2	1.40	1.16	1.06
5.85-8.20	137AC46*+	1	1.72	1.40	1.31
	137AC56*+	2	1.72	1.49	1.31
4.90-7.05	159AC46*	1	1.90	1.92	1.40
	159AC56*	2	1.90	2.01	1.40
3.95-5.85	187AC46*+	1	1.97	1.96	1.45
	187AC56*+	2	1.97	2.05	1.45
3.30-4.90	229AC46*	1	2.70	2.08	1.97
	229AC56*	2	2.70	2.17	1.97
2.60-3.95	284AC46*+	1	2.72	2.19	1.87
	284AC56*+	2	2.72	2.28	1.87
1.70-2.30	430AC46*	1	4.00	2.59	3.08
	430AC56*	2	4.00	2.65	3.08
1.12-1.70	650AC46*	1	5.30	5.60	2.68

Notes: + *Flanges are round, not square as shown.*

* *See ordering information page 61*

TYPE N STANDARD ADAPTERS

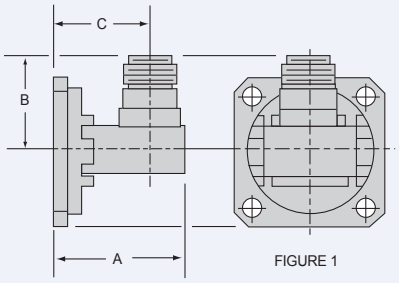

FIGURE 1

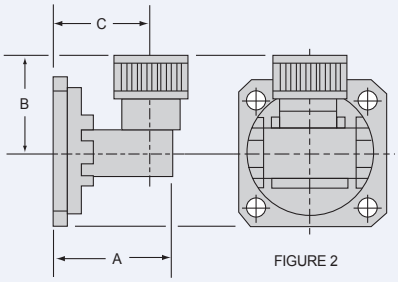

FIGURE 2

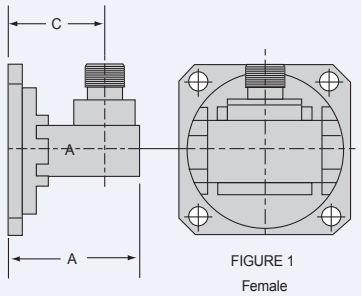

FIGURE 1
Female

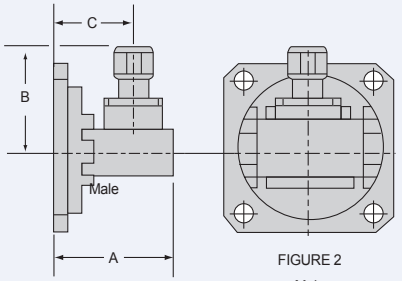

FIGURE 2
Male

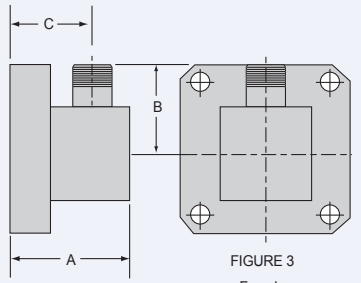

FIGURE 3
Female

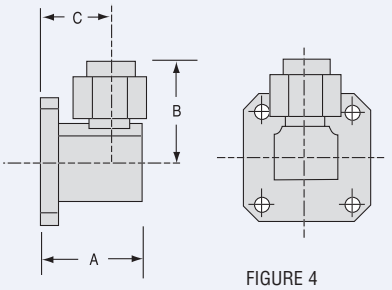

FIGURE 4

Waveguide to Coax Adapters

SMA Standard Adapters

Microwave Development Laboratories' miniature waveguide to coaxial adapters cover frequency ranges 2.6-40.0 GHz. VSWR 1.25 MAX with some typically 1.14 VSWR.

Double Ridge Adapter

VSWR 1.3 MAX

FREQ. RANGE GC/SEC.	MDL MODEL NUMBER	FIG.	VSWR MAX.	DIMENSIONS "A" MAX.	"B" MAX.	"C" + .020
33.0-50.0	22AC206	3	1.35	0.62	0.50	0.45[3]
26.50-40.00	28AC206	3	1.30	0.52	0.52	0.35[1]
	28AC216	4	1.35	0.52	0.63	0.35[1]
	28AC226	3	1.35	0.52	0.63	0.35[3]
22.00-33.00	34AC206	3	1.25	0.62	0.54	0.40[1]
	34AC216	4	1.25	0.62	0.63	0.40[1]
	34AC226	3	1.25	0.62	0.54	0.40[3]
18.00-26.50	42AC206	3	1.25	0.62	0.54	0.40
	42AC216	3	1.15	0.62	0.54	0.40[1]
	42AC226	3	1.15	0.62	0.57	0.40
	42AC236	4	1.25	0.62	0.65	0.40[1]
15.00-22.00	51AC206	3		0.67	0.59	0.43
12.40-18.00	62AC86	1		1.08	0.73	0.81
	62AC96	2		1.08	0.85	0.81
	62AC206	3		0.79	0.62	0.50
	75AC86	1		1.20	0.77	0.82
	75AC96	2		1.20	0.89	0.55
10.00-15.00	75AC206	3		0.90	0.68	0.55
	75AC216	3	1.15	0.90	0.68	0.55
8.20-12.40	90AC86	1		1.15	0.68	0.82
	90AC96	2		1.15	0.91	0.82
	90AC206	3		1.02	0.69	0.62
7.00-11.00	102AC86	1		1.40	0.85	0.95
	102AC96	2		1.40	0.97	0.95
7.05-10.00	112AC86	1		1.40	0.85	0.93
	112AC96	2		1.40	0.97	0.93
5.85-8.20	137AC86+	1		1.52	0.91	0.93
	137AC96+	2		1.52	1.03	0.93
4.90-7.05	159AC86	1		1.65	0.99	0.99
	159AC96	2		1.65	1.12	0.99
3.95-5.85	187AC86+	1		1.77	1.03	0.99
	187AC96+	2		1.77	1.16	0.99
3.30-4.90	229AC86	1		2.70	1.17	1.41
	229AC96+	2		2.70	1.29	1.41
2.60-3.95	284AC86	4		2.65	1.49	1.62
	284AC96+	2		2.65	1.36	1.62

Double Ridged Adapter

7.50-18.0	750AC86	1		1.08	0.73	0.81

Notes:

[1] *2.9 mm connector*
[2] *3.5 mm connector*
[3] *2.4 mm connector*
\+ *Flanges are round, not square as shown.*
1. *"206" Models are one piece construction with mechanically captivated connectors. Material Alumimum cover flanges only.*
[3] *3.4mm connector*

Waveguide to Coax Adapters

Type N Low VSWR Adapters

VSWR of 1.065:1, with pressure VSWR 1.1 maximum. MDL uses the swept frequency sliding load technique to test all models. All low VSWR adapters are measures feeding the waveguide port and terminating the coaxial port with a precision sliding load with beadless connector.

FREQ. RANGE GC/SEC.	MDL MODEL NUMBER	FIG.	DIMENSIONS "A" MAX.	"B" MAX.	"C" ± .020
10.00-15.00	75AC106*	1	1.20	1.00	0.87
	75AC116*	2	1.20	1.09	0.87
8.20-12.40	90AC106*	1	1.15	1.02	0.88
	90AC116*	2	1.15	1.11	0.88
7.00-11.00	102AC106*	1	1.40	1.08	1.06
	102AC116*	2	1.40	1.17	1.06
7.05-10.00	112AC106*	1	1.40	1.07	1.06
	112AC116*	2	1.40	1.16	1.06
5.85-8.20	137AC106*+	1	1.72	1.40	1.31
	137AC116*+	2	1.72	1.49	1.31
4.90-7.05	159AC106*	1	1.90	1.60	1.40
	159AC116*	2	1.90	2.01	1.40
3.95-5.85	187AC106*+	1	1.97	1.96	1.45
	187AC116*+	2	1.97	2.05	1.45
3.30-4.90	229AC106*	1	2.70	2.15	1.88
	229AC116*	2	2.70	2.30	1.88
2.60-3.95	284AC106*+	1	2.72	2.19	1.87
	284AC116*+	2	2.72	2.28	1.87

Notes:

+ *Flanges are round, not square as shown.*

* *See ordering information page*

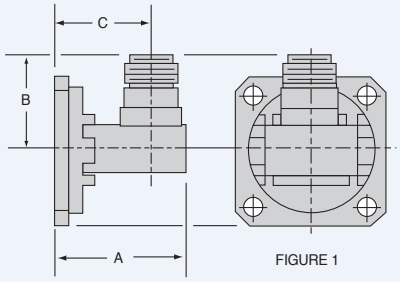

FIGURE 1

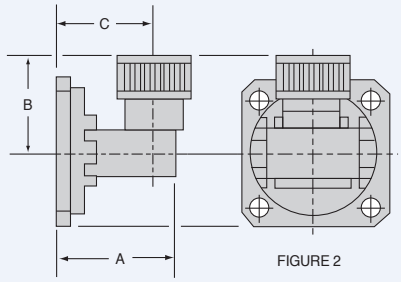

FIGURE 2

FREQ. RANGE GC/SEC.	MDL MODEL NUMBER	VSWR MAX.	"A" MAX.	CONNECTORS MALE	FEMALE	DWG
End Launch Adapters						
26.5-40.0	28AEL66	1.35	1.00	-	2.4mm	
26.5-40.0	28AEL86	1.35	1.00	-	2.9mm	
22.0-33.0	34AEL66	1.35	1.00	-	2.4mm	
22.0-33.0	34AEL86	1.35	1.00	-	2.9mm	
15.0-22.0	51AEL86	1.25	1.50	-	SMA	
12.4-18.0	62AEL86	1.25	1.50	-	SMA	
12.4-18.0	62AEL106	1.35	1.75	-	TNC	
10.0-15.0	75AEL46	1.25	1.75	-	N	
10.0-15.0	75AEL86	1.25	1.50	-	SMA	
5.85-8.20	137AEL46	1.25	2.50	-	N	
	159AEL46					
3.30-4.90	229AEL46	1.25	3.80	-	N	

Waveguide to Coax Adapters

SMA Low VSWR Adapters

Maximum VSWR of 1.065:1 with pressure VSWR 1.1 maximum. MDL uses the swept frequency sliding load techniques to test all models. All low VSWR adapters are measured feeding the waveguide port and terminating the coaxial port with a precision sliding load with a beadless connector.

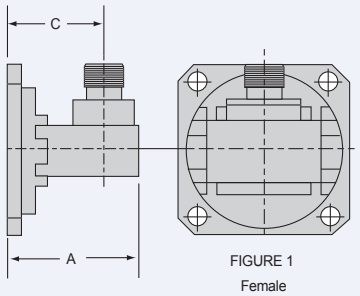

FIGURE 1
Female

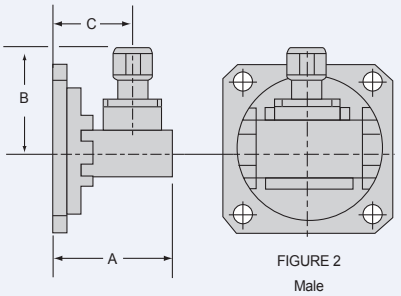

FIGURE 2
Male

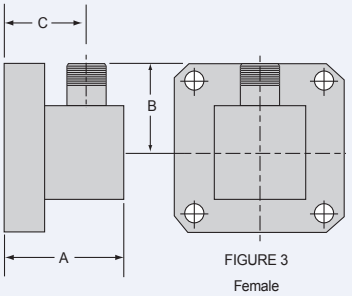

FIGURE 3
Female

FREQ. RANGE GC/SEC.	MDL MODEL NUMBER	FIG.	DIMENSIONS "A" MAX.	"B" MAX.	"C" ± .020
12.40-18.00	62AC126*	1	1.08	0.73	0.81
	62AC136*	2	1.08	0.85	0.81
10.00-15.00	75AC126*	1	1.20	0.77	0.82
	75AC136*	2	1.20	0.89	0.82
8.20-12.40	90AC126*	1	1.15	0.78	0.82
	90AC136*	2	1.15	0.91	0.82
7.00-11.00	102AC126*	1	1.40	0.85	0.95
	102AC136*	2	1.40	0.97	0.95
7.05-10.00	112AC126*	1	1.40	0.85	0.93
	112AC136*	2	1.40	0.97	0.93
5.85-8.20	137AC126*+	1	1.52	0.91	0.99
	137AC136*+	2	1.52	1.03	0.99
4.90-7.05	159AC126*	1	1.65	0.99	0.99
	159AC136*	2	1.65	1.12	0.99
3.95-5.85	187AC126*+	1	1.77	1.03	0.99
	187AC136*+	2	1.77	1.16	0.99
3.30-4.90	229AC126*	1	2.70	1.17	1.41
	229AC136*	2	2.70	1.29	1.41
2.60-3.95	284AC126*+	1	2.65	1.36	1.62
	284AC136*+	2	2.65	1.49	1.62

Notes: + *Flanges are round, not square as shown.*
* *See ordering information page*

Section 12

Terminations

Introduction

The MDL section of terminations consists of compact low power elements and flanged assemblies, with a typical VSWR of 1.20:1, low power precision elements and assemblies with a typical VSWR of 1.01:1 and medium power loads which will handle up to 125 watts average.

Terminations

LOW POWER LOAD ELEMENTS

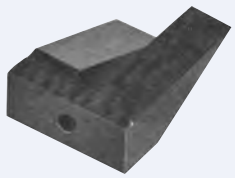

Low Power Load Elements

The MDL LE36 low power load elements are designed to have low VSWR despite their small size and compact design. When used in standard waveguide for the specified band these loads will handle from 1 to 5 watts continuous average power depending on the size. See LW36 series for average power ratings. Typical VSWR 1.2 Max. Configuration of elements subject to change.

W/G SIZE	FREQ. RANGE (GHz)	MODEL NUMBER	LENGTH MAX.	MOUNTING HOLE TAP SIZE
Low Power Load Elements				
WR28	26.5-40.0	28LE36	1.00	2-56NC
WR42	18.0-26.5	42LE36	1.00	2-56NC
WR51	15.0-18.0	51LE36	1.00	4-40NC
WR62	12.4-18.0	62LE36	1.53	4-40NC
WR75	10.0-15.0	75LE36	1.53	4-40NC
WR90	8.2-12.4	90LE36	1.53	4-40NC
WR102	7.0-11.0	102LE36	1.89	4-40NC
WR112	7.0-10.0	112LE36	1.89	4-40NC
WR137	5.4-8.2	137LE36	2.77	6-32NC
WR159	4.9-7.0	159LE36	3.02	6-32NC
WR187	3.9-5.9	187LE36	3.15	6-32NC

LOW POWER LOADS

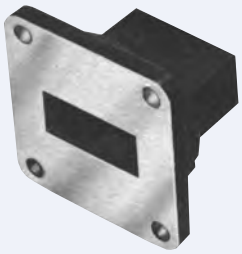

Low Power Loads

The MDL LW36 series low power loads use load elements that exhibit low VSWR despite their small size. Both aluminum & brass material is available with cover or choke flange equivalent to the standard JAN flange. Typical VSWR 1.2 Max.

W/G SIZE	FREQ. RANGE (GHz)	MODEL NUMBER	LENGTH MAX.	AVG. POWER WATTS MAX.
WR28	26.5-40.0	28LW36	1.20	0.5
WR42	18.0-26.5	42LW36	1.20	0.5
WR51	15.0-18.0	51LW36	1.20	1.0
WR62	12.4-18.0	62LW36	1.64	1.0
WR75	10.0-15.0	75LW36	1.64	1.0
WR90	8.2-12.4	90LW36	1.64	2.0
WR102	7.0-11.0	102LW36	2.02	2.0
WR112	7.0-10.0	112LW36	2.02	3.0
WR137+	5.4-8.2	137LW36	2.89	4.0
WR159	4.9-7.0	159LW36	3.14	4.0
WR187+	3.9-5.9	187LW36	3.27	5.0

Double Ridged Loads (Typical VSWR 1.40 MAX)

WRD750	7.5-18.0	D750LW36*	8.00	1.0

Notes: + *Flanges are round, not square as shown.*

Terminations

Low Power Precision Elements

The MDL LE46 series precision load elements are designed for use in precision waveguide to produce as near ideal matched conditions as is practical. These loads exhibit a maximum VSWR of 1.02:1 over the full waveguide band and are typically less than 1.01:1 over most of that band. These loads are designed so that they may be used as sliding loads and thereby average out VSWR error. See LW56 series for average power ratings. Configuration of elements subject to change.

W/G SIZE	FREQ. RANGE (GHz)	MODEL NUMBER	LENGTH MAX.	MOUNTING HOLE TAP SIZE
Low Power Precision Elements				
WR28	26.5-40.0	28LE46	2.50	2-56NC
WR42	18.0-26.5	42LE46	3.00	2-56NC
WR51	15.0-18.0	51LE46	4.00	4-40NC
WR62	12.4-18.0	62LE46	5.00	4-40NC
WR75	10.0-15.0	75LE46	6.00	4-40NC
WR90	8.2-12.4	90LE46	7.00	4-40NC
WR102	7.0-11.0	102LE46	8.00	4-40NC
WR112	7.0-10.0	112LE46	8.00	4-40NC
WR137	5.4-8.2	137LE46	9.00	6-32NC
WR159	4.9-7.0	159LE46	9.00	6-32NC
WR187	3.9-5.9	187LE46	10.00	6-32NC
WR229	3.3-4.9	229LE46	11.00	8-32NC
WR284	2.6-4.0	284LE46	12.00	8-32NC

LOW POWER PRECISION ELEMENTS

Low Power Precision Loads

The MDL LW56 series low power precision loads use load elements that exhibit very low VSWR and produce as near ideal matched conditions as is practical. They exhibit a maximum VSWR of 1.05:1 over the full waveguide band and are typically less than 1.01:1 over most of that band. Loads are equivalent to the standard JAN flange. Flanges for WR159 and WR229 are equivalent to UG-1731/U and UG-1727/U respectively.

W/G SIZE	FREQ. RANGE (GHz)	MODEL NUMBER	LENGTH MAX.	AVG. POWER WATTS MAX.
Low Power Precision Loads				
WR28	26.5-40.0	28LW56	2.86	0.5
WR42	18.0-26.5	42LW56	3.41	0.5
WR51	15.0-18.0	51LW56	4.50	1.0
WR62	12.4-18.0	62LW56	5.50	1.0
WR75	10.0-15.0	75LW56	6.53	1.0
WR90	8.2-12.4	90LW56	7.56	2.0
WR102	7.0-11.0	102LW56	8.63	2.0
WR112	7.0-10.0	112LW56	8.69	3.0
WR137+	5.4-8.2	137LW56	9.75	4.0
WR159	4.9-7.0	159LW56	9.75	4.0
WR187+	3.9-5.9	187LW56	10.94	5.0
WR229	3.3-4.9	229LW56	11.63	5.0
WR284+	2.6-4.0	284LW56	13.25	5.0

Notes: + *Flanges are round, not square as shown.*

LOW POWER PRECISION LOADS

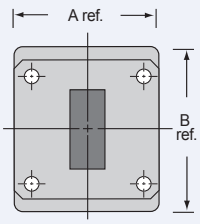

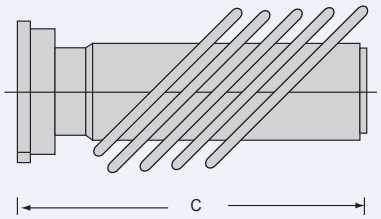

Terminations

Medium Power Loads

The MDL Model LW26 medium power load has wide application in both systems and test-bench set-ups because of its extremely low VSWR. Orientation of the load may be in any plane with effective cooling assured by the angled fins. This model is available with various flange modifications, materials, and finishes to meet special customer requirements. VSWR 1.05 max.

W/G SIZE	MODEL NUMBER	FREQ. RANGE (GHz)	POWER RATING AVERAGE WATTS	POWER RATING PEAK*† KW	MOUNTING FLANGE EQUIVALENT	APPROX. DIMENSIONS A	B	C (MAX.)
Medium Power Loads								
WR62	62LW26	12.40-18.0	75	75	UG1665/U	1.38	1.63	3.50
WR90	90LW26	8.20-12.4	100	100	UG135/U	1.63	1.88	4.25
WR112	112LW26	7.05-10.0	125	125	UG138/U	2.50	3.00	6.00

Notes: * *See ordering information page*

Section 13

Waveguide Adapters & Transformers

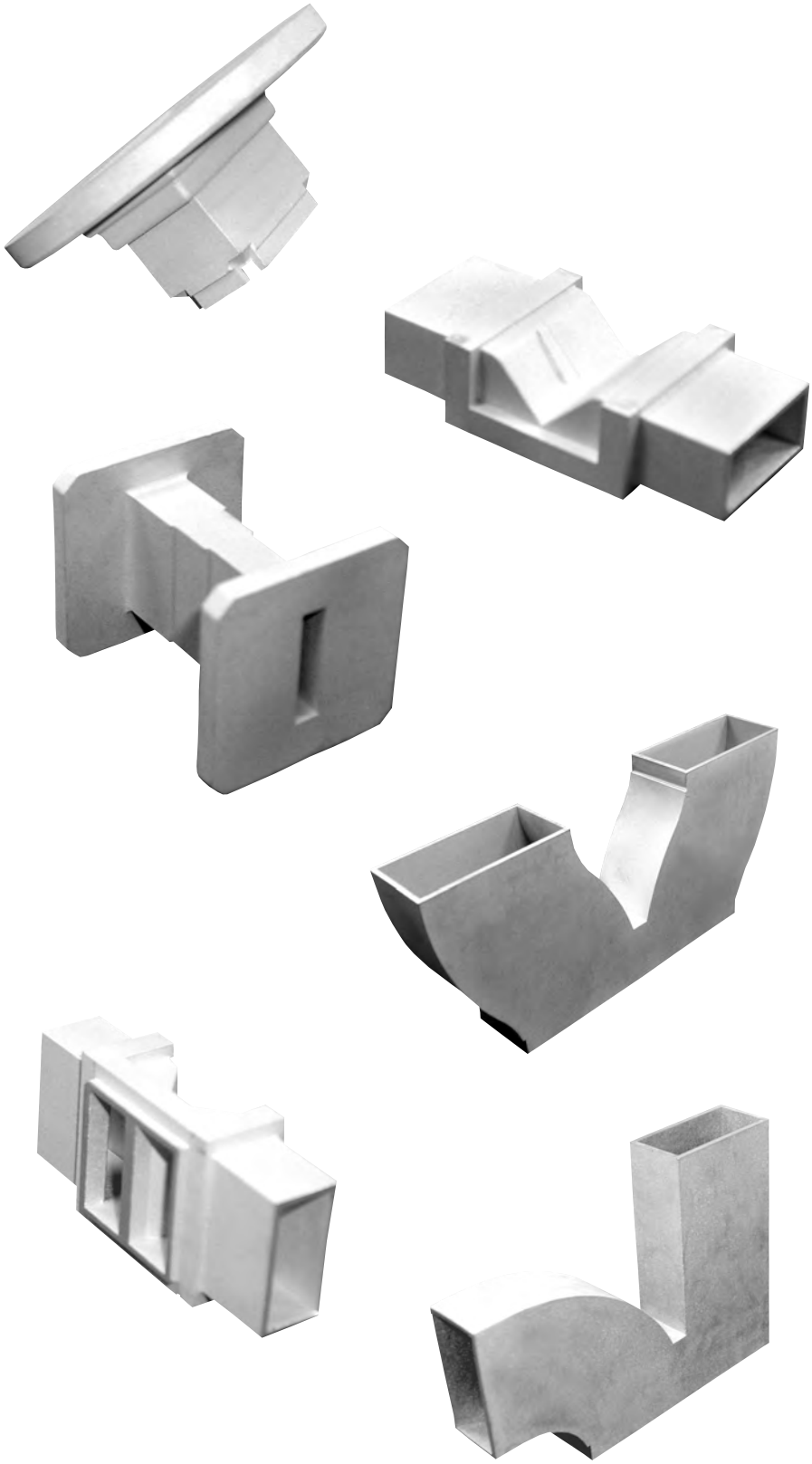

Introduction

The line of waveguide adapters presented in this catalog represents over 50 years of experience in the mechanical and electrical design of waveguide components. These units are cast within MDL's own foundry facilities. Quality control standards are such as to insure the highest calibre casting. VSWR characteristics of these adapters is typically 1.05.

Units are readily supplied from stock or on short term delivery. In addition to these items, and if customers demands cannot be met with these basic designs, unusual configurations can be fabricated or castings developed to meet specific requirements.

Sidewall Adapters

SIDEWALL E AND STRAIGHT ADAPTERS

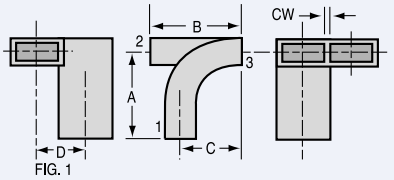

FIG. 1

FIG. 2a

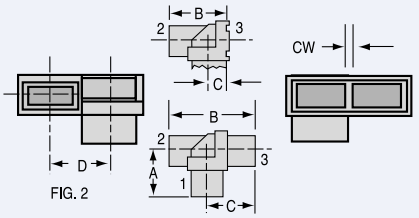

FIG. 2

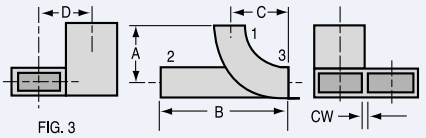

FIG. 3

SIDEWALL H AND STRAIGHT ADAPTERS

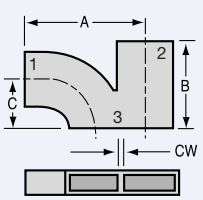

FIG. 2

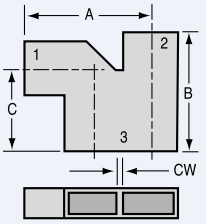

FIG. 1

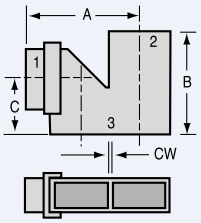

FIG. 3

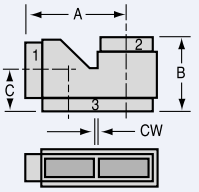

FIG 4

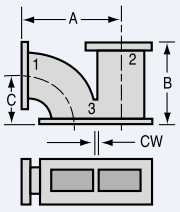

FIG. 5

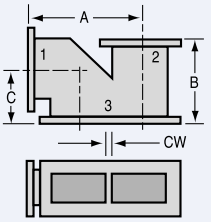

FIG. 6

W/G	FIG	C/W	Terminals 1	Terminals 2	Terminals 3	MDL Model Number	Dimensions A	Dimensions B	Dimensions C	Dimensions D
Sidewall E and Straight Adapters										
WR62	1	.040	W/G	W/G[1]	W/G[1]	62JS42	1.19	1.22	.81	.66
	1	.040	W/G	W/G[1]	62FS52[2]	62JS34	1.19	1.22	.81	.66
	3	.040	W/G[3]	W/G	W/G	62JS342	.81	1.56	.62	.66
	1	.090	W/G	W/G[1]	W/G	62JS52	1.19	1.22	.81	.71
	1	.090	W/G	W/G[1]	62FS92[2]	62JS24	1.19	1.22	.81	.71
	2	.090	W/G	W/G	W/G	62JS212	.59	1.08	.59	.71
	2a	.090	W/G	W/G	Corral	62JS282	.59	.74	.25	.71
	3	.090	W/G[3]	W/G	W/G	62JS292	.81	1.56	.62	.71
WR112	1	.064	W/G[4]	112FA42[2]	W/G	112JS14	.94	1.20	.50	1.19

Notes:
[1] *Terminal #2 will not accept cover flange because of E bend configuration. Add 0.25 to B dimension if choke flange is used.*
[2] *Integrally cast flange: See flange specification table, page 46.*
[3] *Terminal #1 will accept only UG type choke or butt type cover flanges. Add 0.25 to A dimension.*
[4] *Terminal #1 will not accept any flange because of the integrally cast flange on terminal #2*

W/G	FIG	C/W	Terminals 1	Terminals 2	Terminals 3	MDL Model Number	Dimensions A	Dimensions B	Dimensions C
Sidewall H and Straight Adapters									
WR28	1	.040	W/G	W/G	W/G	28JS32	1.48	1.14	.61
WR42	2	.040	W/G	W/G	W/G	42JS82	1.08	.80	.44
	2	.090	W/G	W/G	W/G	42JS122	1.13	.80	.44
WR62	2	.040	W/G	W/G	W/G	62JS62	1.33	1.21	.58
	2	.040	Corral	W/G	W/G	62JS72	1.33	1.21	.58
	3	.040	W/G	W/G	W/G	62JS302	1.30	1.20	.64
	3	.040	Corral	W/G	W/G	62JS312	1.03	1.20	.64
	3	.090	W/G	W/G	W/G	62JS322	1.35	1.20	.64
	3	.090	Corral	W/G	W/G	62JS332	1.08	1.20	.64
	2	.090	W/G[1]	W/G	W/G	62JS82	1.38	1.21	.58
WR75	2	.050	W/G	W/G	W/G	75JS22	1.60	1.50	.62
WR90	2	.050	W/G[2]	W/G	W/G	90JS42	1.88	1.56	.75
	2	.120	W/G[2]	W/G	W/G	90JS52	2.03	1.56	.75
	4	.120	W/G	W/G	W/G	90JS82†	1.78	1.31	.76
WR112	2	.064	W/G[3]	W/G	W/G	112JS62	2.62	2.13	1.19
	2	.150	W/G[3]	W/G	W/G	112JS72	2.71	2.13	1.19
WR137	2	.074	W/G[4]	W/G[4]	W/G	137JS12	3.36	3.06	1.50
	2	.150	W/G[4]	W/G[4]	W/G	137JS22	3.44	3.06	1.50
B137	6	.150	B137FA12[5]	B137FA12[5]	W/G	B137JS14	2.50	1.70	1.26
WR159	5	.150	CMR159[5]	CMR159[5]	CMRD-159[5]	159JS14	3.69	2.93	1.69
WR187	2	.128	W/G[6]	W/G[6]	W/G	187JS22	4.71	4.26	2.18

Notes:
[1] *If flange is required use UG type choke or butt-type cover: Add 0.25 to A dimension.*
[2] *If UG choke flange is to be used, add 0.31 to A dimension.*
[3] *If UG choke flange is to be used, add 0.44 to A dimension.*
[4] *If flange is required use UG type choke or butt-type cover: Add 0.50 to A or B dimensions.*
[5] *Integrally cast flange: See flange specification table, page 46.*
[6] *If flange is required use UG type choke or butt-type cover: Add .69 to A or B dimensions.*
† *OD of all terminals are machined to accept ID of flanges.*

Sidewall Adapters

W/G	FIG	C/W	Terminals 1	Terminals 2	Terminals 3	MDL Model Number	Dimensions A	Dimensions B	Dimensions C	Dimensions D
Sidewall Panty Adapters										
WR28	1	.040	W/G	W/G	W/G	28JS22	1.12	1.12	.82	.32
	1	.090	W/G	W/G	W/G	28JS42	1.12	1.12	.87	.37
WR42	2	.040	W/G	W/G	W/G	42JS162	.84	.84	.95	.46
	2	.090	W/G	W/G	W/G	42JS72	.84	.84	1.00	.51
WR62	1	.040	W/G	W/G	W/G	62JS12	1.41	1.41	1.52	.66
	1	.090	W/G	W/G	W/G	62JS22	1.41	1.41	1.57	.71
WR75	1	.050	W/G	W/G	W/G	75JS12	1.25	1.25	1.60	.80
C90	2	.050	W/G[1]	W/G[1]	W/G	C90JS12†	1.43	1.43	2.23	.95
(0.900)	2	.070	W/G[1]	W/G[1]	W/G	C90JS22†	1.43	1.43	2.25	.97
x0.150HGT	2	.100	W/G[1]	W/G[1]	W/G	C90JS32†	1.43	1.43	2.28	1.00
WR90	1	.050	W/G[2]	W/G[2]	W/G	90JS62	1.13	1.13	1.69	.95
0.150HGT	2	.050	W/G[2]	W/G[2]	W/G	90JS92	1.22	1.22	1.90	.95
	1	.120	W/G[2]	W/G[2]	W/G	90JS32	1.13	1.13	1.76	1.02
WR112	1	.064	W/G[3]	W/G[3]	W/G	112JS32	1.28	1.28	1.94	1.19
	1	.150	W/G[3]	W/G[3]	W/G	112JS42	1.28	1.28	2.03	1.27
WR187	1	.128	W/G[4]	W/G[4]	W/G	187JS12	2.69	2.69	3.88	2.00

Notes: [1] *If flange is required use C90FA12 (see flange specification table on page 46) OD of terminals machined to accept ID of flange.*
[2] *If UG choke flange is to be used add 0.31 to A or B dimensions.*
[3] *If flange is required use UG type choke or butt type cover: Add 0.44 to A or B dimensions.*
[4] *If flange is required use UG type choke or butt type cover: Add 0.69 to A or B dimensions for choke flanges. 0.38 for cover flange.*
† *OD of terminals 1 and 2 are machined to accept ID of flanges.*

SIDEWALL PANTY ADAPTERS

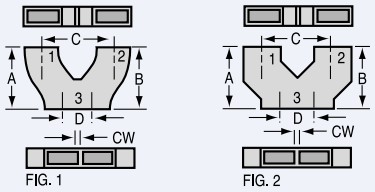

W/G	FIG	C/W	Terminals 1	Terminals 2	Terminals 3	MDL Model Number	Dimensions A	Dimensions B	Dimensions C	Dimensions D
Sidewall Dual H										
WR28	1	.040	W/G	W/G	W/G	28JS12	1.16	.69	2.17	.61
WR42	2	.040	W/G	W/G	W/G	42JS12	.62	.62	1.70	.44
	2a	.040	Corral	Corral	W/G	42JS32	.73	.73	1.92	.44
	2	.090	W/G	W/G	W/G	42JS42	.62	.62	1.75	.44
	2a	.090	Corral	Corral	W/G	42JS52	.73	.73	1.97	.44
WR62	2	.040	W/G	W/G	W/G	62JS92	1.29	1.29	3.24	.88
	2a	.040	Corral	Corral	W/G	62JS112	1.38	1.38	3.42	.88
	3	.040	W/G	W/G	W/G	62JS232	.75	.75	2.16	.64
	3a	.040	Corral	Corral	W/G	62JS262	.37	.37	1.40	.64
	2	.090	W/G	W/G	W/G	62JS122	1.29	1.29	3.29	.88
	2a	.090	Corral	Corral	W/G	62JS142	1.38	1.38	3.47	.88
	3	.090	W/G	W/G	W/G	62JS222	.75	.75	2.21	.64
	3a	.090	Corral	Corral	W/G	62JS272	.37	.37	1.45	.64
WR90	7	.050	Corral	Corral	W/G	A90JS32	.575	.575	2.100	.690
.200HGT	8	.050	W/G	W/G	Corral	A90JS42	.775	.775	2.500	.575
	9	.050	Corral	Corral	Corral	A90JS52	.575	.575	2.100	.575
WR90	1	.050	W/G	W/G	W/G	90JS12	.98	.98	2.91	.79
	1	.120	W/G	W/G	W/G	90JS22	.98	.98	2.98	.79
WR112	1	.064	W/G	W/G	W/G	112JS12	1.10	1.10	3.39	.97
	1	.150	W/G	W/G	W/G	112JS22	1.10	1.10	3.47	.97

SIDEWALL DUAL H

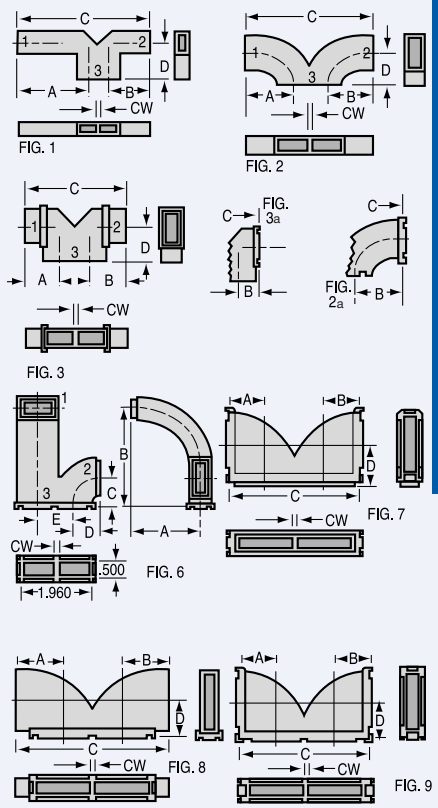

W/G	FIG	C/W	Terminals 1	Terminals 2	Terminals 3	MDL Model Number	Dimensions A	Dimensions B	Dimensions C	Dimensions D	Dimensions E
Sidewall E & H Adapter											
WR90	6	.050	W/G	W/G	Corral	90JS72†	1.84	2.62	.75	.75	.95

Notes: [1] *Integrally cast flange: See flange specification table, page 46.*
[2] *If flange is required use UG type choke or butt type cover. Add .312 to B dimension.*
† *OD of terminals 1 and 2 are machined to accept ID of flanges.*

Topwall Adapters

TOPWALL DUAL E ADAPTERS

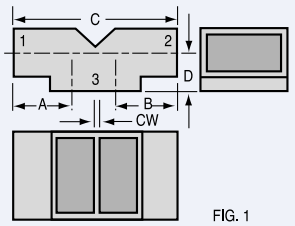

FIG. 1

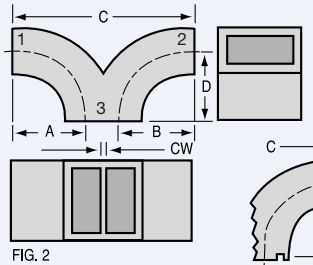

FIG. 2

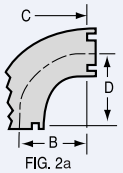

FIG. 2a

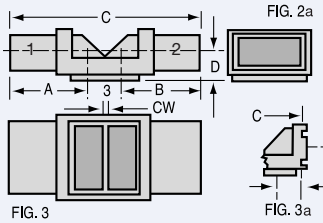

FIG. 3

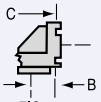

FIG. 3a

TOPWALL E AND STRAIGHT ADAPTERS

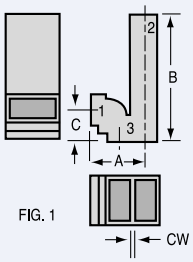

FIG. 1

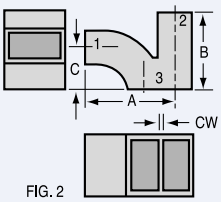

FIG. 2

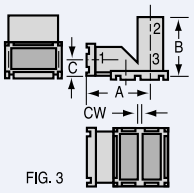

FIG. 3

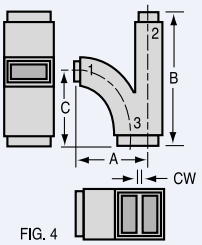

FIG. 4

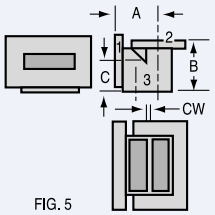

FIG. 5

TOPWALL H AND STRAIGHT ADAPTER

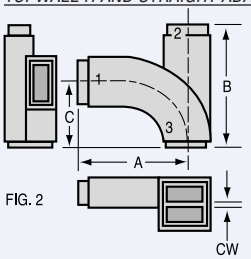

FIG. 2

Topwall Dual E Adapters

W/G	FIG	C/W	Terminals 1	Terminals 2	Terminals 3	MDL Model Number	Dimensions A	Dimensions B	Dimensions C	Dimensions D
WR51	1	.040	W/G[1]	W/G[1]	W/G	51JT32	.42	.42	1.14	.25
WR62	2	.090	W/G[1]	W/G[1]	W/G	62JT12	.69	.69	1.78	.50
WR90	2	.050	W/G[2]	W/G[2]	W/G	90JT22	.99	.99	2.43	.75
	2a	.050	Corral	Corral	Corral	90JT112	.90	.90	2.25	.90
	3	.050	W/G	W/G	W/G	90JT62	1.03	1.03	2.50	.39
	3a	.050	Corral	Corral	W/G	90JT52	.33	.33	1.10	.39
	2	.120	W/G[2]	W/G[2]	W/G	90JT12	.99	.99	2.50	.75
	2a	.120	Corral	Corral	Corral	90JT122	.90	.90	2.32	.90
	3	.120	W/G	W/G	W/G	90JT72	1.03	1.03	2.57	.39
	3a	.120	Corral	Corral	W/G	90JT82	.33	.33	1.17	.39
WR112	3	.064	W/G[3]	W/G[3]	W/G	112JT32	.86	.86	2.28	.45
	3a	.064	Corral	Corral	W/G	112JT42	.34	.34	1.25	.45
	3	.150	W/G[3]	W/G[3]	W/G	112JT12	.86	.86	2.37	.45
	3a	.150	Corral	Corral	W/G	112JT22	.34	.34	1.34	.45

Notes: [1] *If flange is required use UG type choke or butt-type cover. Add .250 to A or B dimensions.*
[2] *If flange is required use UG type choke or butt-type cover. Add .312 to A or B dimensions.*
[3] *If UG choke is required add .44 to A or B dimensions.*

Topwall E and Straight Adapters

W/G	FIG	C/W	Terminals 1	Terminals 2	Terminals 3	MDL Model Number	Dimensions A	Dimensions B	Dimensions C
WR51	1	.040	W/G[1]	W/G	W/G	51JT12	.66	1.48	.36
WR62	2	.090	W/G[1]	W/G	W/G	62JT22	1.09	.90	.50
WR90	3	.050	Corral	W/G	Corral	90JT92	1.50	1.14	.32
	3	.050	90FA92[2]	90FA92[2]	Corral	90JT14	1.53	1.12	.32
	4	.120	W/G[3]	W/G	W/G	90JT32†	1.72	3.16	1.74
	3	.120	Corral	W/G	Corral	90JT102	1.57	1.14	.32
	3	.120	90FA92[2]	90FA92[2]	Corral	90JT24	1.60	1.12	.32
B137 (1.372x0.487 ID)	5	.150	B137FA12[2]	B137FA12[2]	W/G	B137JT14	1.17	1.36	.82

Notes: [1] *If flange is required use UG type choke or butt-type cover. Add .250 to A dimension.*
[2] *Flange integrally cast: See flange specification table, page 46.*
[3] *If flange is required use UG type choke or butt-type cover. Add .312 to A dimension.*
† *OD of all terminals are machined to accept ID of flanges.*

Topwall H and Straight Adapter

W/G	FIG	C/W	Terminals 1	Terminals 2	Terminals 3	MDL Model Number	Dimensions A	Dimensions B	Dimensions C
WR90	2	.120	W/G	W/G	W/G	90JT42†	2.54	2.84	1.48

Notes: † *OD of all terminals are machined to accept ID of flanges.*

Single Waveguide to Waveguide Adapters

W/G	A	B (TYP)	C	D	E	F (REF)	G	H	MDL Model Number
WR28	0.125	0.06	0.280	0.140	0.361	0.500	0.221	0.375	28JA12
WR42	0.187	0.09	0.420	0.170	0.502	0.625	0.252	0.375	42JA12
WR62	0.187	0.50	0.622	0.311	0.704	0.812	0.393	0.500	62JA12
	0.093	0.50	0.622	0.311	0.704	0.812	0.393	0.500	62JA32
WR75	0.094	0.09	0.750	0.375	0.814	0.910	0.439	0.540	75JA12
	0.094	0.09	0.750	0.375	0.852	0.910	0.477	0.535	75JA22
WR90	0.094	0.09	0.900	0.400	1.004	1.100	0.505	0.600	90JA12
WR90	0.094	0.09	0.900	0.200	1.002	1.100	0.302	0.400	A90JA12
WR102	0.094	0.08	1.020	0.510	1.150	1.220	0.640	0.710	102JA12
WR112	0.250	0.08	1.122	0.497	1.252	1.312	0.627	0.687	112JA12
WR137	0.250	0.09	1.372	0.622	1.503	1.625	0.753	0.875	137JA12
B137 (1.372x0.487 ID)	0.125	0.14	1.372	0.487	1.504	1.625	0.619	0.750	B137JA12
WR187	0.312	0.12	1.872	0.872	2.004	2.062	1.004	1.062	187JA12
WR229	0.312	0.12	2.290	1.145	2.423	2.550	1.278	1.400	229JA12
WR284	0.312	0.14	2.840	1.340	3.006	3.240	1.506	1.740	284JA12
B284 (2.840x1.004 ID)	0.125	0.14	2.840	1.004	3.006	3.170	1.170	1.330	B284JA12

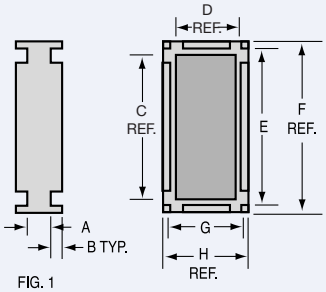

FIG. 1

Transformers Waveguide

Waveguide transformers provide the means of propagating RF energy from one waveguide size to another. This transmission may be achieved by smooth tapers or stepped configurations. Reflections encountered within these transformers are kept to a minimum over the frequency range common to both waveguide sizes.

Methods of manufacture include casting, fabrication, and electroforming, depending on the material required and the waveguide sizes.

Electrical Data					Mechanical Data	
					Terminations*	
					Flange Face = JAN or Equivalent	
					W/G = EIA or Equivalent	
W/G Size	Frequency (GHz)	Model Number	VSWR	Length[3]	Small End	Large End
Waveguide						
WR22-WR28	33.0-40.0	22EU14-1*	1.06	1.75	UG-383/U	UG-599U
WR28-28EU26-1	24.0-35.0	28EU26-1*	1.06	1.00	UG-599/U	UG-1530/U
WR28-WR42[1]	25.0-28.0	28EU16-1*	1.08	2.00	UG-599/U	UG-595/U
WR34-.340sq.	19.0-31.0	SQ34EU16-1*	1.10	1.50	UG-1530/U	UG-1530/U
WR42-WR62	16.5-19.0	42EU14-1*	1.05	1.50	UG-595/U	UG-419/U
WR42-WR51	17.0-23.0	42EU16-1*	1.06	1.50	UG-595/U FOUR .144 DIA. HOLES	1.32x1.32
WR51-WR62	13.5-19.0	51EU16-1*	1.07	0.87	COVER FLANGE 1.32x1.32 FOUR .144 DIA. HOLES	UG-419/U
	14.0-19.0	51EU26-1*	1.05	2.15	COVER FLANGE 1.32x1.32 FOUR .144 DIA. HOLES	UG-419/U
WR62-WR75	11.0-15.0	62EU14-1*	1.07	2.00	UG-419/U	FLG. FACE EQUIV. MIL-F-3922/70-016/017
WR62-WR90[1]	11.5-13.1	62EU16-1*	1.05	3.11	UG-419/U	UG-39/U
WR62-622 dia.	12.8-18.0	Ci62EU16	1.10	2.75	.622x311 I.D. OPENING CIRCULAR OUTPUT	.622 DIA. I.D.
WRD750-WR62	12.4-18.0	D750EU16-1*	1.10	7.00	UG-419/U COVER FLANGE	WRD750-D24
WRD750-WR90	8.2-12.4	D750EU26-1*	1.10	7.00	WRD750-D24 COVER FLANGE	UG-39/U
WR75-WR90	9.9-12.5	75EU26-1*	1.06	1.21	1.50x1.50 FOUR .144 DIA. HOLES	UG-39/U
WR90-WR102	7.6-11.0	90EU14-1*	1.05	1.25	UG-39/U	UG-1493/U
WR90-WR112	7.5-10.5	90EU15	1.12	1.00	WR90 CORRAL	UG-51/U
	7.5-10.5	90EU36-1*	1.10	1.42	UG-39/U	UG-51/U
WR90-(.900x.200)	8.2-12.4	A90EU16-1*	1.05	2.00	UG-39/U	UG-39/U
WR90-(.900x.200)	8.2-12.4	A90EU36	1.05	0.75	WR90 (.900x.200) CORRAL	WR90 CORRAL
WR90-(.900x.200)	8.5-9.6	A90EU46	1.05	0.50	WR90 (.900x.200) CORRAL	WR90 CORRAL
WR90-(.900x.150)	8.4-9.6	C90EU16-1*	1.05	2.00	UG-39/U	UG-39/U
WR90-.800 sq.	8.2-12.4	SQ90EU16-1*	1.10	1.86	UG-39/U CIRCULAR FRAME	1.60 DIA. O.D.
WR102-WR112	7.0-10.0	102EU14-1*	1.05	1.50	UG-1493/U	UG-51/U
WR112-WR137[1]	7.0-8.2	112EU16-1*	1.05	6.19	UG-51/U	UG-344/U
WR137-WR159[1]	5.5-7.0	137EU16-1*	1.05	7.00	UG-344/U	CPR-159/F
WR137-WR187	5.0-6.3	137EU36-1*	1.07	1.91	UG-344/U	UG-149/U
WR137-WR187	5.0-6.3	137EU46	1.07	1.36	WR137 CORRAL	UG-149/U
WR187-WR229	3.7-4.6	187EU16-1*	1.08	1.51	UG-149A/U	CPR-229F
WR284-WR340[2]	2.6-3.3	284EU14-1*	1.05	3.03	UG-584/U	UG-554/U LESS GROOVES

Notes: *M = Mandrel. F = Fabricated. SC = Sand Casting. S = Smooth Taper. X( ) = Step Transformer (No. of Steps)*

* *Cover Flanges*

1 *Supplied in copper alloy only*

2 *Supplied in aluminum alloy only*

3 *Dimensions shown are for cover flanges, both ends.*
When using choke flanges extra length may be added.
Check with the factory for proper dimensions.
Aluminum flanges when required will be equivalent to the brass flanges shown.
All flanges tabulated are brass except where noted.

Section 14

Waveguide Bends & Twists

Theory

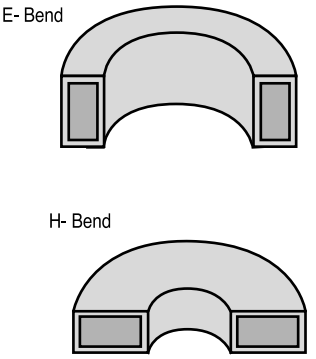

Rectangular waveguide usually is operated with the electric (E) field across the narrow dimension, and with the magnetic loops (H) field across the wide dimension. A waveguide bend with the plane of its electric field changed is called an "E-Bend." With the plane of its magnetic field changed, the waveguide bend is called an "H-Bend." The distinction can be remembered readily if one thinks of the E-Bend being bent in the Easy direction, and the H-bend in the Hard direction.

Styles

MDL offers one of the most complete lines of waveguide bends in the industry. Basic styles in many bends include miter and radius 90° bends, as well as acute and obtuse E and H plane bends in angles from 30° to 180°. MDL's dual-E and offset bends were developed to economize and simplify production requirements, and are now used extensively throughout the field.

Various bend terminations are available including socket, waveguide, and flange. A socket termination is used for adding extra lengths of waveguide, permitting alignment of the inside dimensions and facilitating soldering. Waveguide terminations on cast bends are integrally cast and meet standard waveguide dimensions. Waveguide terminations are generally used where a short waveguide extension is desired. Lengths shown are maximum, but shorter lengths can be machined without damage to electrical performance.

Flange terminations listed in this catalog are integrally cast. However, flanges can be fabricated to other bends upon special request. MDL's exacting production capabilities insure consistent mechanical and electrical reproduction – an important factor for production. MDL welcomes all inquiries on designing prototype bends or producing an established design.

Notes:

1. *Tolerances on quadrants of all 90° cast bends are:*
   ± .003 WR22, WR28, WR34, WR42, WR51
   ± .005 WR62, WR75, WR90, WR102, WR112, WR137
   ± .008 WR159, WR187
   ± .010 WR229, WR284
   All other dimensions are for reference use only.
2. *VSWR: 1.05:1 maximum*
3. *All corral openings are made to accept standard WR size waveguide per MIL-W-85.*
4. *All dimensions and specifications are subject to change without notice.*
   Contact MDL for specific dimensions and tolerances
5. *Style 4E and 4H are true radius bends.*
6. *Drawings shown do not necessarily represent actual casting configurations.*
7. *Finish: Inside and outside, C-12/125 microinches per NAS 823.*
8. *Material Code: A - Aluminum Alloy D712 in accordance with ASTM B-26.*
   B - Copper Alloy C82500 in accordance with Federal spec QQC-390.
   S - Silicon Bronze Alloy S87200 in accordance with Federal spec QQC-390.

Section 14

Waveguide Bends & Twists

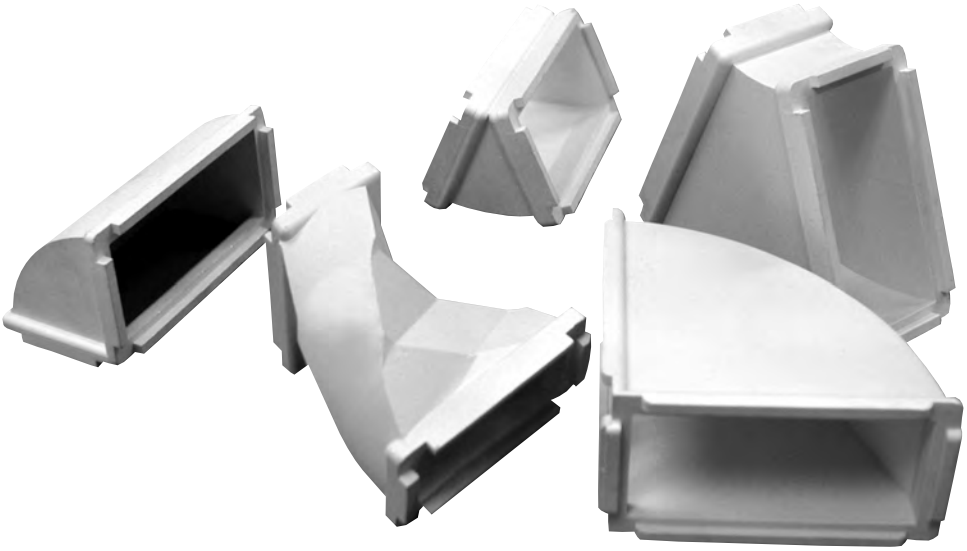

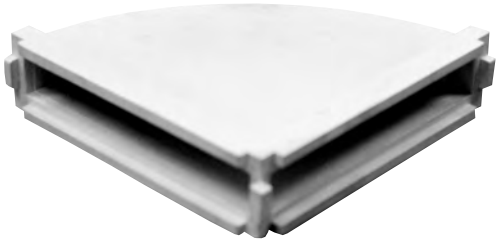

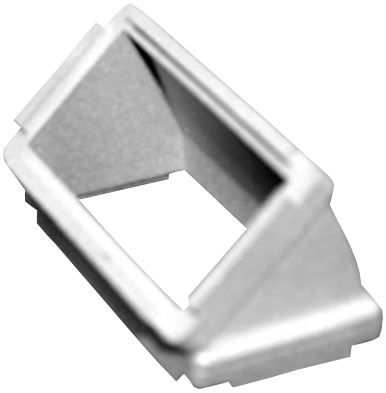

Introduction

Microwave Development Laboratories, Inc., has utilized its full design and development capabilities to improve and supplement the performance of cast waveguide bends. As a result of extensive research, MDL now offers the most complete line of cast bends in the industry. These units are cast within MDL's own foundry facilities. Quality control standards are such as to insure the highest calibre casting. VSWR characteristics of these bends is typically 1.03 with a maximum of 1.05.

Units are readily supplied from stock or on short term delivery. In addition to these items, unusual configuration can be fabricated or castings developed to meet specific requirements if customers demands cannot be met with these basic designs.

Waveguide Bends

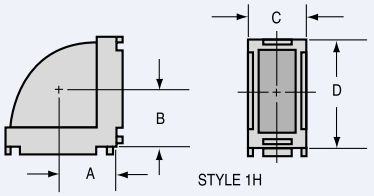

STYLE 1H

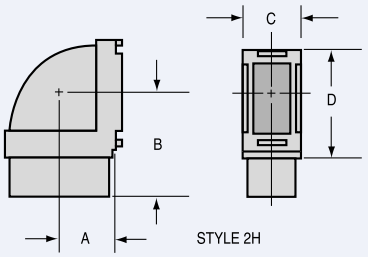

STYLE 2H

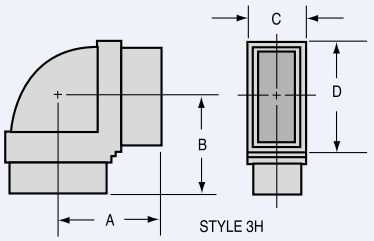

STYLE 3H

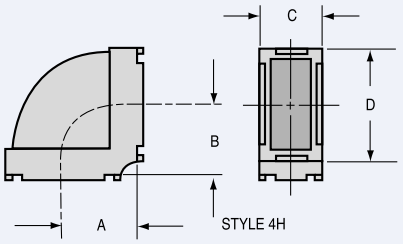

STYLE 4H

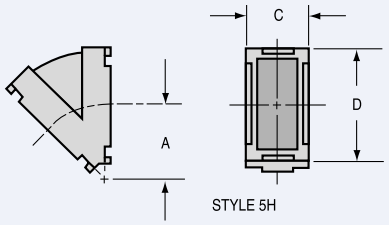

STYLE 5H

W/G Size Freq GHz	Angle	Style	Model Number	Dimensions A	B	Ref C	Ref D
WR22	90°	1E	22BE11	.125	.125	.40	.30
33.0 to 50.0 GHz		1H	22BH11	.187	.187	.30	.40
		3E	22BE31	Under Development			
		3H	22BH31	Under Development			
	45°	5E	22BE22	.169	-	.40	.30
		5H	22BH22	.322	-	.30	.40
	30°	5E	22BE12	.138	-	.40	.30
		5H	22BH12	.387	-	.40	.30
WR28	90°	1E	28BE11	.140	.140	.44	.30
26.50 to 40.00 GHz		2E	28BE22	.140	.375	.44	.35
		3E	28BE12	.375	.375	.44	.35
		1H	28BH11	.210	.210	.30	.44
		1H	28BH111	.343	.343	.30	.44
		2H	28BH22	.210	.610	.30	.47
		3H	28BH32	.610	.610	.30	.47
	45°	5E	28BE82	.221	.233	.44	.30
		5H	28BH82	.221	.339	.30	.44
	30°	5E	28BE72	.151	.152	.44	.30
		5H	28BH72	.151	.407	.30	.44
WR34	90°	1E	34BE11	.170	.170	.50	.34
22.0 to 33.0 GHz		1H	34BH11	.255	.255	.34	.50
	45°	5E	34BE22	.278	-	.50	.34
		5H	34BH22	.278	.373	.34	.50
	30°	5E	34BE12	.166	.170	.50	.34
		5H	34BH12	.166	.437	.34	.50
WR42	90°	1E	42BE11	.170	.170	.60	.35
18.00 to 26.50 GHz		2E	42BE82	.170	.480	.60	.44
		3E	42BE92	.480	.480	.60	.44
		1H	42BH11	.300	.300	.35	.60
		2H	42BH82	.300	.609	.35	.69
		3H	42BH92	.609	.609	.35	.69
	45°	5E	42BE42	.155	.179	.61	.35
		5H	42BH42	.290	.304	.35	.61
	30°	5E	42BE12	.210	-	.61	.35
		5H	42BH12	.335	-	.35	.61
WR51	90°	1E	51BE11	.187	.187	.67	.42
15.00 to 22.00 GHz		2E	51BE32	.187	.600	.71	.48
		3E	51BE42	.600	.600	.71	.48
		4E	51BE12	.318	.318	.69	.50
		1H	51BH11	.312	.312	.42	.67
		2H	51BH52	.312	.725	.46	.71
		3H	51BH62	.725	.725	.46	.71
		4H	51BH12	.399	.399	.43	.68
	45°	5E	51BE52	.241	-	.67	.42
		5H	51BH22	.900	-	.44	.75
	30°	5E	51BE62	.282	-	.76	.51
		5H	51BH102	.407	-	.51	.76

Waveguide Bends

W/G Size Freq GHz	Angle	Style	Model Number	Dimensions A	B	Ref C	Ref D
WR62	90°	1E	62BE11	.250	.250	.81	.50
12.40 to 18.00 GHz		1E	62BE111	.280	.280	.81	.50
		2E	62BE21	.250	.600	.81	.50
		3E	62BE42	.600	.600	.81	.55
		4E	62BE82	.406	.406	.80	.58
		1H	62BH11	.368	.368	.52	.78
		2H	62BH21	.368	.625	.51	.82
		3H	62BH112	.625	.625	.51	.82
		4H	62BH62	.578	.578	.50	.81
	60°	5E	62BE52	.625	-	.78	.48
		5E	62BE222	.240	-	.79	.48
		5H	62BH192	.396	-	.48	.79
	45°	5E	62BE32	.240	-	.79	.48
		5E	62BE122	.406	-	.86	.56
		5E	62BE92	.625	-	.80	.50
		5H	62BH72	.396	-	.48	.79
	30°	5E	62BE22	.240	-	.79	.48
		5H	62BH32	.396	-	.48	.79
WR75		1E	75BE11	.325	.325	.95	.58
10.00 to 15.00 GHz		1E	75BE111	.312	.312	.95	.56
		2E	75BE21	.325	.750	.95	.58
		3E	75BE32	.750	.750	.95	.58
		1H	75BH11	.484	.484	.57	.95
		1H	75BH111	.500	.500	.56	.94
		2H	75BH21	.484	.875	.57	.95
		3H	75BH32	.875	.875	.57	1.00
	45°	5E	75BE72	.376	-	.97	.59
		5H	75BH72	.800	-	.57	.95
	35°	5E	75BE42	.358	-	.95	.58
	30°	5E	75BE82	.290	-	.95	.58
		5H	75BE82	.290	-	.95	.58
	30°	5H	75BH62	.625	-	.56	.93

Double Ridge Bends

W/G Size Freq GHz	Angle	Style	Model Number	Dimensions A	B	Ref C	Ref D
WRD750		4E	D750BE12	.410	.410	.89	.52
7.50 to 18.0 GHz		4H	D750BH12	.593	.593	.52	.89
WRD650		4E	D650BE11	.815	.815	.92	.52
6.50 to 18.0 GHz		4H	D650BH11	.815	.815	.52	.92

WAVEGUIDE BENDS

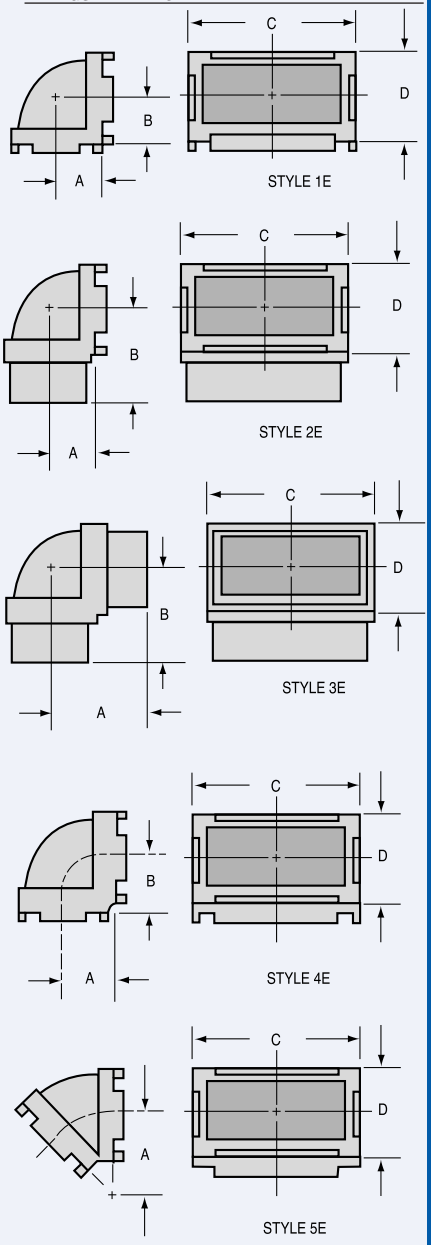

Waveguide Bends

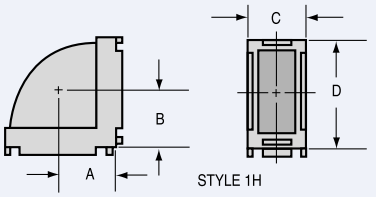

STYLE 1H

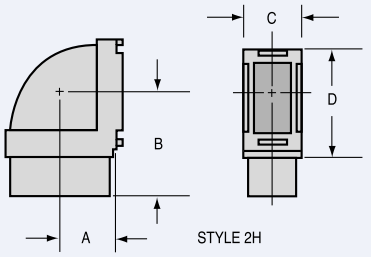

STYLE 2H

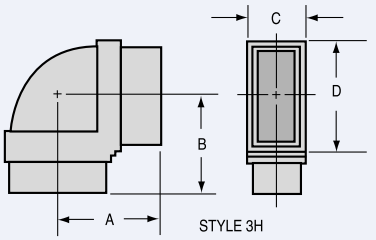

STYLE 3H

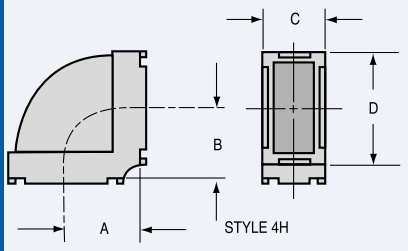

STYLE 4H

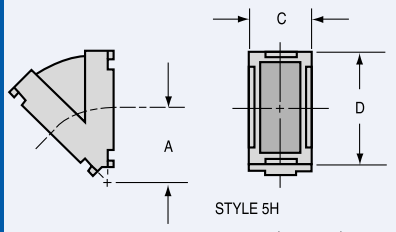

STYLE 5H

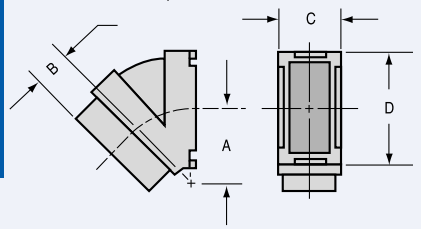

STYLE 6H

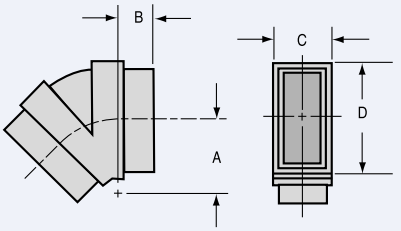

STYLE 7H

W/G Size Freq GHz	Angle	Style	Model Number	Dimensions A	B	Ref C	Ref D
WR90	90°	1E	90BE11	.325	.325	1.13	.63
8.20 to 12.40 GHz		2E	90BE21	.325	.900	1.12	.63
		3E	90BE112	.906	.906	1.12	.63
		3E	90BE202	.656	1.875	1.12	.64
		4E	90BE42	.453	.453	1.15	.65
		1H	90BH11	.575	.575	.60	1.10
		2H	90BH21	.575	1.030	.63	1.13
		3H[1]	90BH32	1.030	1.030	.63	1.14
		3H	90BH302	1.700	1.500	.63	1.15
		4H	90BH322	.750	.750	.65	1.15
		4H	90BH332	1.500	1.500	.65	1.15
	60°	5E	90BE212	.453	-	1.13	.63
		5H	90BH292	.750	-	.63	1.13
	45°	5E	90BE232	.453	-	1.13	.63
		5H	90BH342	.750	-	.63	1.13
	30°	5E	90BE222	.453	-	1.13	.63
		5H	90BH312	.750	-	.63	1.13

Notes: [1] *Rib one side only*

Waveguide Bends

W/G Size Freq GHz	Angle	Style	Model Number	Dimensions A	B	Ref C	Ref D
WR102	90°	1E	102BE11	.380	.380	1.27	.76
7.0 to 11.00 GHz		2E	102BE22	.380	.843	1.27	.76
		3E	102BE32	.843	.843	1.27	.76
		1H	102BH11	.640	.640	.76	1.27
		2H	102BH22	.640	1.093	.76	1.27
		3H	102BH32	1.093	1.093	.76	1.27
	45°	5E	102BE42	.500	-	1.27	.76
		6E	102BE52	.500	.453	1.27	.76
		7E	102BE62	.500	.453	1.27	.76
		5H	102BH82	.835	-	.76	1.27
	30°	5E	102BE72	.645	-	1.27	.76
		6E	102BE82	.645	.453	1.27	.76
		7E	102BE92	.645	.453	1.27	.76
		5H	102BH42	.835	-	.76	1.27
		6H	102BH52	.835	.453	.76	1.27
		7H	102BH62	.835	.453	.76	1.27

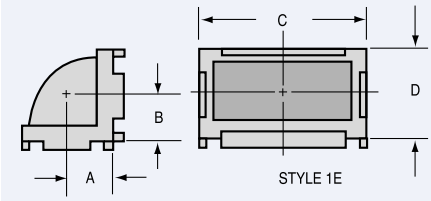

STYLE 1E

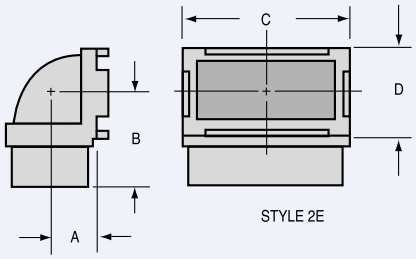

STYLE 2E

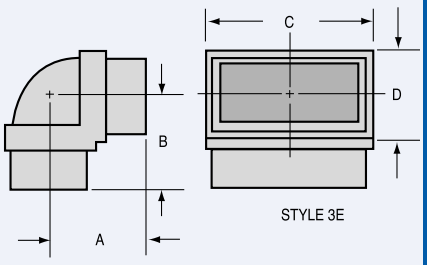

STYLE 3E

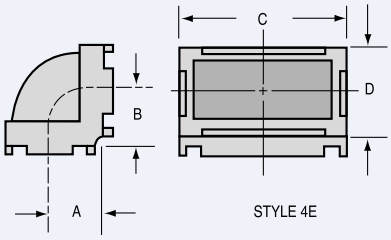

STYLE 4E

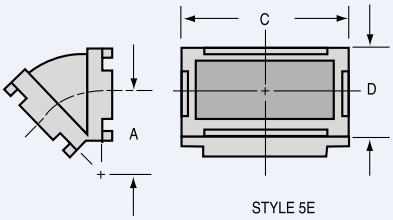

STYLE 5E

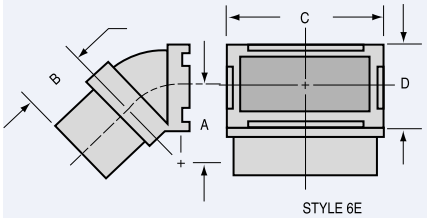

STYLE 6E

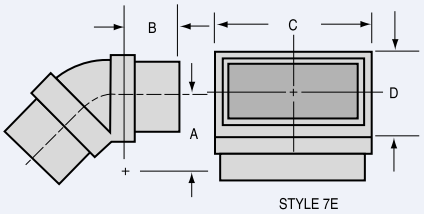

STYLE 7E

Waveguide Bends

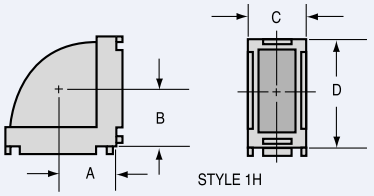

STYLE 1H

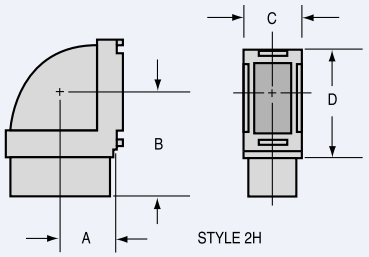

STYLE 2H

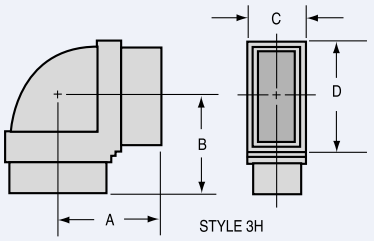

STYLE 3H

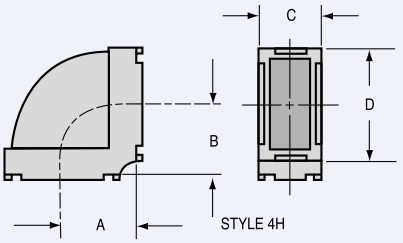

STYLE 4H

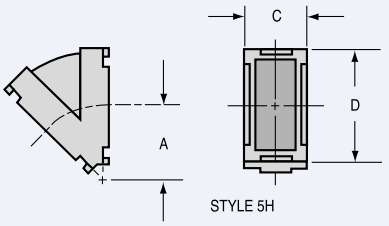

STYLE 5H

W/G Size Freq GHz	Angle	Style	Model Number	Dimensions A	B	Ref C	Ref D
WR112	90°	1E	112BE11	.344	.344	1.39	.76
7.05 to 10.00 GHz		1E	112BE111	.382	.382	1.39	.76
		2E	112BE21	.344	.844	1.39	.76
		3E	112BE32	.844	.844	1.39	.81
		4E	112BE62	.593	.593	1.36	.74
		1H	112BH11	.656	.656	.76	1.39
		1H	112BH111	.695	.695	.76	1.39
		2H	112BH21	.656	1.156	.76	1.39
		3H	112BH31*	1.156	.859	.62	1.25
	45°	5E	112BE42	.594	-	1.38	.75
		5H	112BH42	1.187	-	.75	1.38
	30°	5E	112BE52	.594	-	1.38	.75
		5H	112BH52	1.187	-	.75	1.38
WR137	90°	1E	137BE11	.438	.438	1.64	.88
5.85 to 8.20 GHz		1E	137BE111	.437	.437	1.62	.87
		2E	137BE21	.438	.938	1.64	.88
		3E	137BE32	.938	.938	1.59	.84
		1H	137BH11	.828	.828	.89	1.63
		1H	137BH111	.812	.812	.87	1.62
		2H	137BH21	.828	1.320	.85	1.59
		3H	137BH32	1.320	1.320	.85	1.59
	45°	5E	137BE52	.436	-	1.62	.87
		5H	137BH52	.811	-	.87	1.62
	30°	5E	137BE42	.467	-	1.62	.87
		5H	137BH42	.842	-	.87	1.62
WR159	90°	1E	159BE11	.550	.550	1.90	1.11
4.90 to 7.05 GHz		2E	159BE22	.550	.915	1.86	1.06
		3E	159BE32	.915	.915	1.86	1.06
		1H	159BH11	1.000	1.000	1.11	1.90
		4H	159BH12	1.562	1.562	1.18	1.96

Notes: *Cast without exterior ribs

Waveguide Bends

W/G Size Freq GHz	Angle	Style	Model Number	Dimensions A	B	Ref C	Ref D
WR187	90°	1E	187BE11	.593	.593	2.18	1.18
3.95 to 5.85 GHz		1E	187BE111	.562	.562	2.19	1.18
		2E	187BE32	.593	1.093	2.17	1.17
		3E	187BE22	1.093	1.093	2.17	1.17
		4E	187BE82	1.063	1.063	2.13	1.13
		1H	187BH11	1.062	1.062	1.18	2.18
		2H	187BH22	1.062	1.625	1.18	2.18
		3H	187BH12	1.625	1.625	1.18	2.18
		4H	187BH52	2.187	2.187	1.16	2.16
	45°	5E	187BE62	1.062	-	2.18	1.18
		5H	187BH62	2.187	-	1.18	2.18
	30°	5E	187BE92	1.062	-	2.18	1.18
		5H	187BH72	2.187	-	1.18	2.18
WR229	90°	1E	229BE11	.700	.700	2.61	1.47
3.30 to 4.90 GHz		2E	229BE22	.700	1.093	2.54	1.47
		3E	229BE32	1.093	1.093	2.54	1.47
		1H	229BH11	1.234	1.234	1.46	2.54
		2H	229BH22	1.234	1.718	1.41	2.60
		2H	229BH62	1.234	2.000	1.45	2.60
		3H	229BH32	1.718	1.718	1.41	2.62
		3H	229BH52	2.000	2.000	1.46	2.60
	45°	5E	229BE52	1.500	-	2.61	1.46
		5H	229BH72	1.750	-	1.46	2.61
WR284	90°	1E	284BE11	.781	.781	3.25	1.68
2.60 to 3.95 GHz		2E	284BE21	.781	1.625	3.25	1.68
		3E	284BE31	1.625	1.625	3.25	1.68
		1H	284BH11	1.531	1.531	1.67	3.18
		2H	284BH21	1.531	3.600	1.67	3.18
		3H	284BH31	3.250	3.600	1.74	3.25
	45°	5E	284BE112	.927	-	3.20	1.70
		5H	284BH82	1.677	-	1.67	3.18
	30°	5E	284BE102	1.045	-	3.20	1.70
		5H	284BH72	1.748	-	1.67	3.18

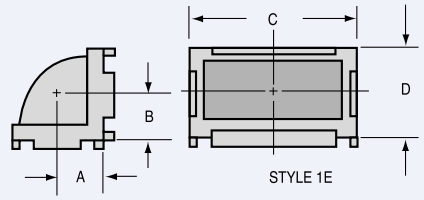

STYLE 1E

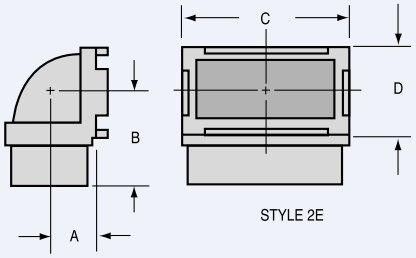

STYLE 2E

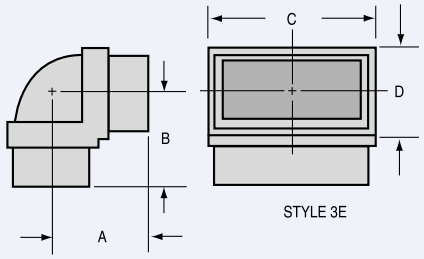

STYLE 3E

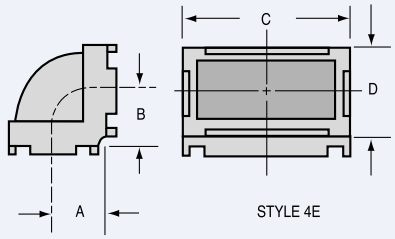

STYLE 4E

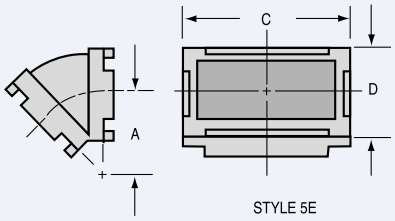

STYLE 5E

Bends with Flanges

BENDS WITH FLANGES

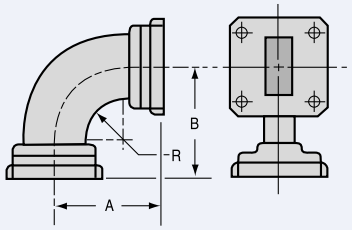

STYLE 1H

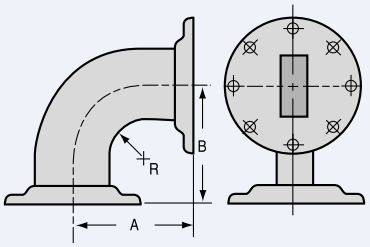

STYLE 2H

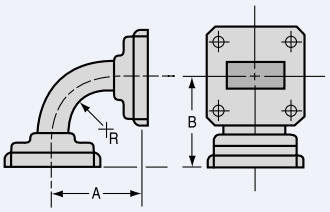

STYLE 1E

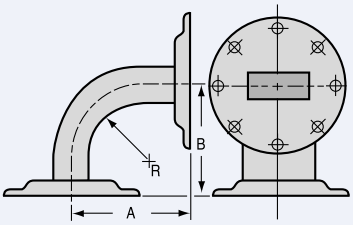

STYLE 2E

W/G Size Freq GHz	Angle	Style	Model Number	Dimensions R	A	B
WR28	90°	1E	28BE18	.50	.95	.95
26.5 to 40.0 GHz		1H	28BH18	.75	1.27	1.27
WR42	90°	1E	42BE18	.75	1.28	1.28
18.0 to 26.5 GHz		1H	42BH18	.75	1.41	1.41
WR51	90°	1E	51BE18	.57	1.33	1.33
15.0 to 22.0 GHz		1H	51BH18	.95	1.69	1.69
WR62	90°	1E	62BE18	.68	1.39	1.39
12.4 to 18.0 GHz		1H	62BH18	1.00	1.86	1.86
WR75	90°	1E	75BE18	.50	1.06	1.06
10.0 to 15.0 GHz		1H	75BH18	.87	1.63	1.63
WR90	90°	1E	90BE18	.75	1.56	1.56
8.2 to 12.4 GHz		1E	90BE28	1.00	1.81	1.81
		1H	90BH18	1.00	2.06	2.06
WR102	90°	1E	102BE18	1.00	1.81	1.81
7.0 to 11.0 GHz		1H	102BH18	2.00	3.50	3.50
WR112	90°	1E	112BE18	.75	1.81	1.81
7.05 to 10.0 GHz		1H	112BH18	1.38	2.75	2.75
WR137	90°	2E	137BE18	1.00	2.25	2.25
5.85 to 8.20 GHz		2H	137BH18	2.00	3.63	3.63
WR187	90°	2E	187BE18	4.00	5.56	5.56
3.95 to 5.85 GHz		2H	187BH18	4.00	7.06	7.06
WR284	90°	2E	284BE18	2.00	4.38	4.38
2.60 to 3.95 GHz		2H	284BH18	6.00	9.63	9.63

W/G Size Freq GHz	Angle	Style	Model Number	Dimensions R	A	B
Double Ridge Bends						
WRD-750-D24		1E*	D750BE18	1.0	1.60	1.60
7.5 to 18.0 GHz		1H*	D750BH18	1.0	1.70	1.70

Notes: *Tolerance: ± .020*
VSWR: 1.1
All flanges equivalent to MIL F 3922.
* *Same configuration as 1E & 1H except double ridge. VSWR 1.1:1. Aluminum only.*

Special Bends

W/G Size Freq GHz	Angle	Style	Model Number	Dimensions A	B	C	D	CW
WR28	90°	1E	28BE52	0.312	0.530	.44	.30	-
26.5 to 40.0 GHz		2E	28BE62	0.312	1.330	1.44	.30	-
WR51	90°	4E	51BD12	0.316	0.540	1.28	.46	.080
15.0 to 22.0 GHz		3H	51BG12	0.355	0.355	0.71	.67	.040
WR51 to **WR62**		5H	51BH32	1.000	1.000	-	-	-
WR62	90°	6E	62BD12	0.210	0.590	1.54	.50	.090
12.4 to 18.0 GHz		7E	62BD14	0.406	0.586	1.75	1.31	.040
		9E	62BE162	1.500	1.500	.70	.39	-
		9H	62BH152	1.500	1.500	.39	.70	-
WR75	35°	10E	75BE42	.358	-	.95	.58	-
10.0 to 15.0 GHz								
WR90	90°	17E	90BE252	.475	.475	1.43	.93	-
8.2-12.4 GHz .200 WALL		17H	90BH362	.725	.725	.93	1.43	-

SPECIAL BENDS

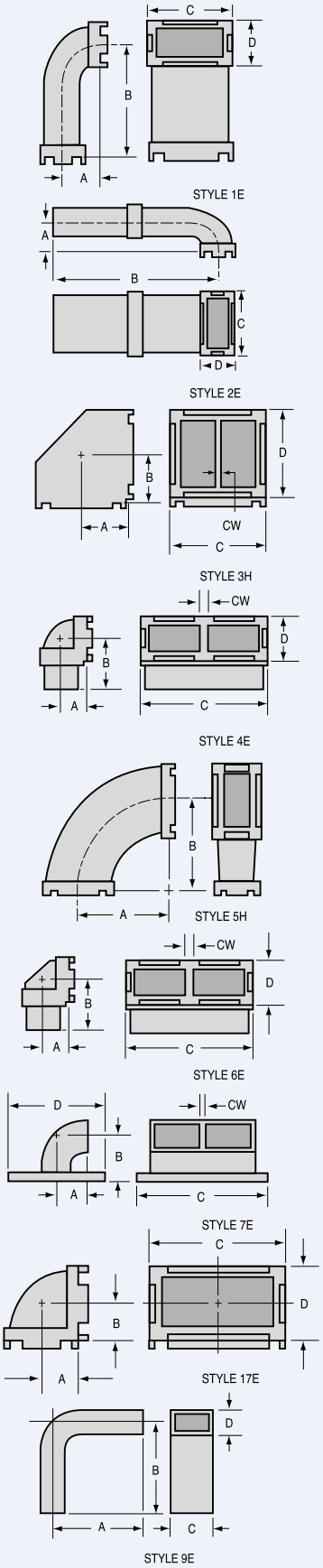

Special Bends

SPECIAL BENDS

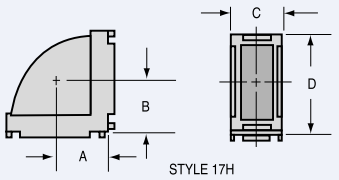

STYLE 17H

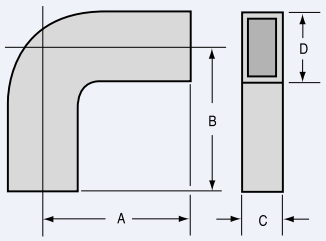

STYLE 9H

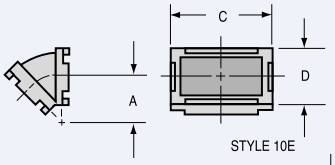

STYLE 10E

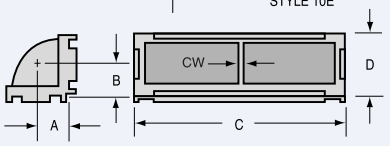

STYLE 11E

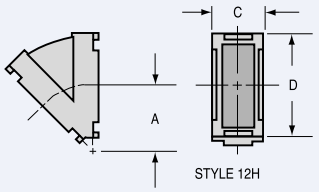

STYLE 12H

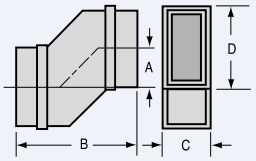

STYLE 15H

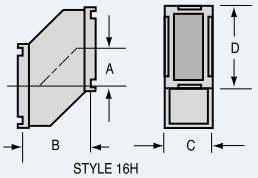

STYLE 16H

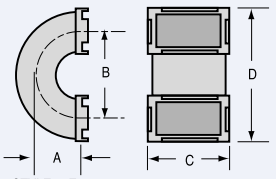

STYLE 13E

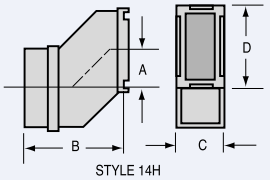

STYLE 14H

W/G Size Freq GHz	Angle	Style	Model Number	Dimensions A	B	C	D	CW
WR90	90°	11E	90BD12	0.325	0.325	2.07	.62	.050
8.2 to 12.4 GHz		11E	90BD22	0.325	0.325	2.14	.62	.120
		11E	90BD32	0.453	0.453	2.17	.75	.050
		9E	90BE242	2.125	2.125	1.00	.50	-
		9H	90BH352	2.125	2.125	.50	1.00	-
	70°34'	5H*	90BH92	1.500	-	.63	1.13	-
	33°30'	12H	90BH102	1.500	-	.63	1.13	-
	22°	12H	90BH112	1.500	-	.63	1.13	-
	180°	13E	90BE192	0.325	0.650	1.13	1.28	-
WR112	90°	9E	112BE172	2.125	2.125	1.25	.62	-
7.05 to 10.0 GHz		9H	112BH102	2.125	2.125	.62	1.25	-
	180°	13E	112BE112	0.900	1.625	1.47	2.47	1.05
WR137		15H	137BP12	0.920	2.450	.86	1.61	-
5.85 to 8.20 GHz		14H	137BP22	0.920	2.006	.86	1.61	-
		16H	137BP32	0.920	1.563	.86	1.61	-
WR187		16H	187BP12	1.250	2.150	1.11	2.11	-
3.95 to 5.85 GHz		14H	187BP22	1.250	2.545	1.11	2.11	-
		15H	187BP32	1.250	2.950	1.11	2.11	-
WR284		15H	284BP12	1.250	4.190	1.62	3.12	-
2.60 to 3.95 GHz		14H	284BP22	1.250	3.333	1.62	3.12	-
		16H	284BP32	1.250	2.475	1.62	3.12	-

Notes:* *Same as style 5H except 70°*

Narrow Height Bends

W/G Size Freq GHz	Degree	Height ID	Style	Model Number	Dimensions A	B	Ref C	Ref D
WR62	90°	.156	1E	A62BE11	.165	.165	.78	.32
12.40 to 18.00 GHz			1H	A62BH11	.368	.368	.32	.76
	45°	.156	4E	A62BE41	.160	-	.78	.32
			4H	A62BH41	.396	-	.32	.79
	90°	.138	1E	B62BE12	.224	.224	.78	.28
			2E	B62BE22	.224	.750	.78	.28
			3E	B62BE32	.750	.750	.78	.28
			1H	B62BH12	.450	.450	.30	.87
			2H	B62BH22	.450	.670	.30	.87
			3H	B62BH32	.670	.670	.30	.87
	45°	.138	4H	B62BH42	.450	-	.30	.78
WR75	90°	.200	1E	A75BE12	.225	.225	.93	.45
10.00 to 15.00 GHz			1H	A75BH12	.500	.500	.38	1.00
		.188	1E[1]	A75BE11	.225	.225	.87	.31
			1H[1]	A75BH11	.500	.500	.31	.90
WR90	90°	.150	1E	C90BE12	.180	.180	1.14	.39
8.20 to 12.40 GHz			2E	C90BE22	.180	.630	1.14	.39
			3E	C90BE32	.630	.630	1.14	.39
			1H	C90BH32	.575	.575	.39	1.14
			2H	C90BH42	.575	1.093	.39	1.14
		.175	1E	C90BE42	.200	.200	1.10	.37
			1H	C90BH52	.575	.575	.37	1.10
		.200	1E	A90BE11	.215	.215	1.10	.41
			1E	A90BE111	.180	.180	1.10	.41
			1E[2]	A90BE41	.180	.180	1.02	.32
			2E[2]	A90BE122	.180	.780	1.02	.29
			2E	A90BE72	.215	1.270	1.10	.41
			3E	A90BE62	1.270	1.270	1.10	.41
			4E	A90BE32	.353	.353	1.10	.39
			1H	A90BH11	.575	.575	.40	1.10
			1H[2]	A90BH41	.575	.575	.32	1.02
			2H[2]	A90BH82	.575	.825	.30	.99
			2H	A90BH22	.575	.968	.40	1.10
			3H	A90BH32	.968	.968	.40	1.10
	45°	.150	4H	C90BH22	.750	-	.39	1.13
			5E[2]	A90BE112	.353	-	1.10	.39
		.200	5E	A90BE52	.353	-	1.10	.39
			4H[2]	A90BH52	.750	-	.40	1.10
			4H	A90BH92	.750	-	.40	1.10
	15°	.200	4H	A90BH42	.750	-	.40	1.10
	180°	.200	5H[3]	A90BH72	.575	1.543	.40	2.65

Notes: [1] *W/G socket accepts .020 wall W/G*
[2] *W/G socket accepts .030 wall W/G*
[3] *W/G socket accepts .040 wall W/G*

NARROW HEIGHT BENDS

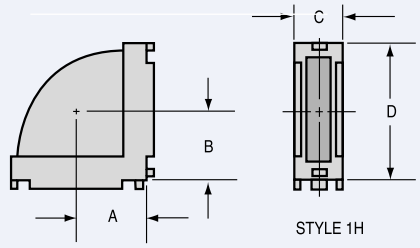

STYLE 1H

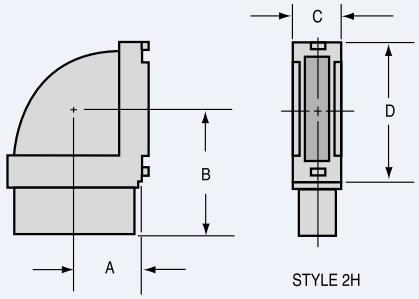

STYLE 2H

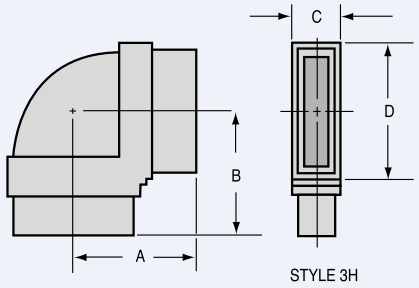

STYLE 3H

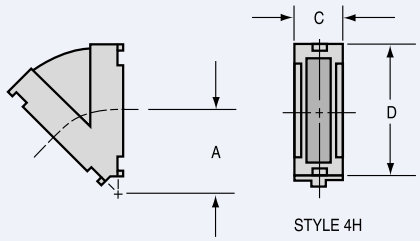

STYLE 4H

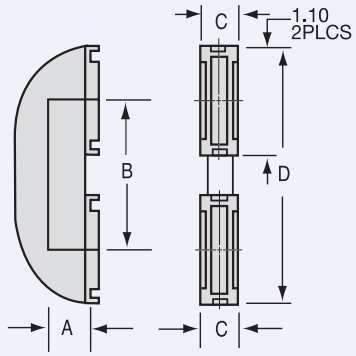

STYLE 5H

Narrow Height Bends

NARROW HEIGHT BENDS

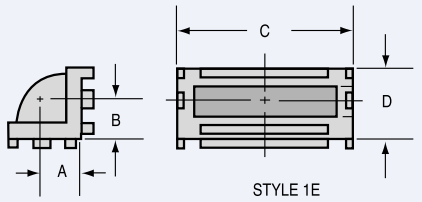

STYLE 1E

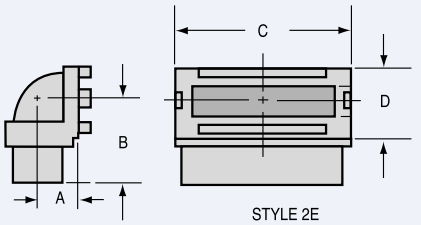

STYLE 2E

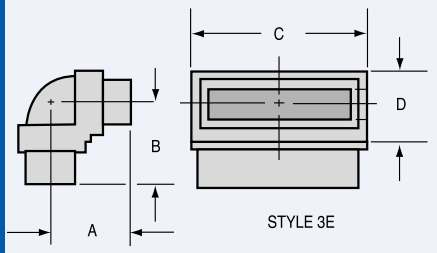

STYLE 3E

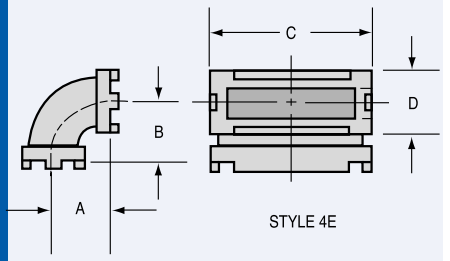

STYLE 4E

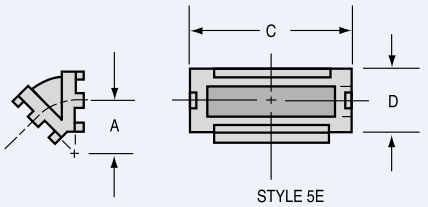

STYLE 5E

W/G Size Freq GHz	Degree	Height ID	Style	Model Number	Dimensions A	B	Ref C	Ref D
WR102	90°	.255	1E	A102BE102	.250	.250	1.26	.50
7.00 to 11.00 GHz			1H	A102BH72	.640	.640	.50	1.26
WR137	90°	.248	1E	A137BE12	.200	.200	1.60	.48
5.85 to 8.20 GHz			2E	A137BE22	.200	.470	1.60	.48
WR159	90°	.397	1E	A159BE12	.400	.400	1.82	.62
4.90 to 7.00 GHz			1H	A159BH12	1.000	1.000	.62	1.82
WR284	90°	.400	1E	A284BE22	.310	.310	3.13	.75
2.60 to 3.95 GHz			2E	A284BE12	.310	.490	3.13	.75
			1H	A284BH22	1.531	1.531	.80	3.15
		.670	1E	A284BE32	.460	.460	3.24	1.12
			2E	A284BE62	.460	2.160	3.22	1.08
			1H	A284BH11	1.530	1.530	1.07	3.25
			2H	A284BH21	1.530	1.860	1.07	3.25
	45°	.670	5E[3]	A284BE42	.927	-	3.00	.83
			5E	A284BE72	.927	-	.32	1.03
			4H	A284BH32	1.677	-	.83	3.00

Formed Bends

MDL's line of waveguide formed bends, twists, and offsets cover band sizes WR15 through WR284 with radius from .25 inches to 18.0 inches in .12 inch increments.

Single and multiple E and H bends, twists and offsets may be ordered in the following waveguide material: OFHC, Copper, Brass, Aluminum, and Coin Silver. More difficult forms, which do not lend themselves readily to the bending process, can be electroformed or developed into a precision cast unit.

W/G Size Freq GHz	W/G Size O.D. Inches	E Bend Throat Radius (R)	H Bend Throat Radius (R)
WR28	0.360 x 0.220	.31	.43
26.5 to 40.0 GHz		.50	.75
		.56	-
WR42	0.500 x 0.250	.75	.75
18.0 to 26.5 GHz			
WR51	0.590 x 0.335	-	.25
15.0 to 22.0 GHz		.57	.37
		1.37	1.00
WR62	0.702 x 0.391	.25	.15
12.4 to 18.0 GHz		.30	.25
		.37	.31
		.56	.50
		.68	.62
		.75	.75
		.87	1.00
		1.25	1.09
		1.75	1.25
		2.00	1.50
		2.75	1.62
		4.00	1.75
WR75	0.850 x 0.475	.50	-
10.0 to 15.0 GHz		1.25	.87
		2.00	1.25
WR90	1.000 x 0.500	.25	.25
8.20 to 12.40 GHz		.37	.37
		.43	.50
		.50	1.00
		.62	2.00
		.69	2.50
		.75	2.75
		1.00	3.00
		1.25	-
		1.50	-
		2.00	-
		2.50	-
WR90	1.000 x .300 O.D.	-	.37
8.2 to 12.4 GHz	1.000 x .200 I.D.	-	.50
WR102	1.148 x 0.638	.75	2.00
7.00 to 11.0 GHz			
WR112	1.250 x 0.625	.37	.43
7.05 to 10.0 GHz		.50	.62
		.75	.75
		1.50	1.37
		2.75	2.00
		-	2.75
WR137	1.500 x 0.750	1.00	1.00
5.85 to 8.20 GHz		-	2.00
WR187	2.000 x 1.000	-	.75

FORMED BENDS

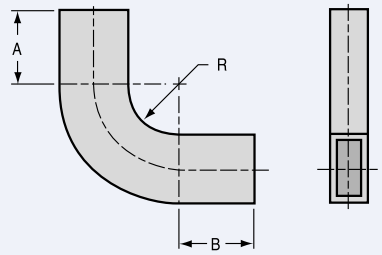

H BEND

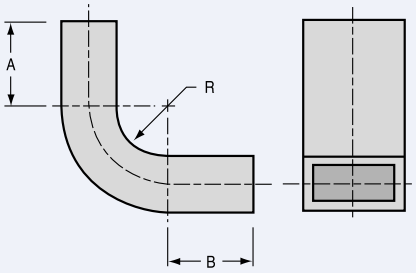

E BEND

Waveguide Twist

WAVEGUIDE TWISTS

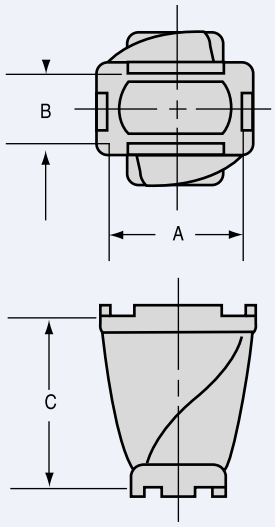

MDL compliments its broad line of cast components with a new high performance cast twist. A full 90° right hand waveguide twist is provided in a minimal length (approximately 3/4 of wavelength at mid-band). A graded effect in the broadwall design produces very low reflections. VSWR is 1.05 max for casting, and 1.10 for twists and flanges. Power handling capacity is approximately 90% of standard waveguide rating.

W/G Size	Freq. GHz	Model Number	Dimensions A	B	C
WR22	33.0-50.0	22TW12	.306	.194	.292
WR28	26.5-40.0	28TW12	.362	.222	.408
WR34	22.0-330	34TW12	.422	.252	.500
WR42	18.00-26.50	42TW12	.502	.252	.625
WR51	15.00-22.00	51TW12	.592	.337	.750
WR62	12.40-18.00	62TW12	.704	.393	.880
WR75	10.00-15.00	75TW12	.852	.477	1.000
WR90	8.20-12.40	90TW12	1.002	.502	1.250
WR102	7.00-11.00	102TW12	1.150	.640	1.375
WR112	7.05-10.00	112TW12	1.252	.627	1.437
WR137	5.85-8.20	137TW12	1.503	.753	1.750
WR187	3.95-5.85	187TW12	2.004	1.004	2.500
WR284	2.60-3.95	284TW12	3.004	1.504	4.000

Twist with Flanges

TWISTS WITH FLANGES

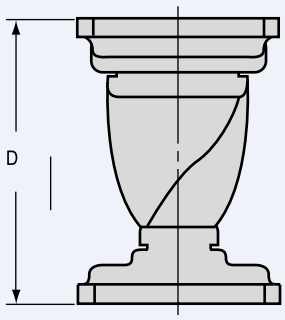

W/G Size	Freq GHz	Model Number	Dimensions (D)
WR42	18.00-26.50	42TW18	1.30
WR51	15.00-22.00	51TW18	1.52
WR62	12.40-18.00	62TW18	1.75
WR75	10.00-15.00	75TW18	2.10
WR90	8.20-12.40	90TW18	2.30
WR102	7.00-11.00	102TW18	2.60
WR112	7.05-10.00	112TW18	2.90
WR137	5.85-8.20	137TW18	3.50
WR187	3.95-5.85	187TW18	4.60
WR284	2.60-3.95	284TW18	7.50

Section 15

Folded Hybrid and Magic Tees and Transducers

FEEDING E ARM
The collinear arms are 180˚ out of phase.

FEEDING H ARM
The collinear arms are in phase.

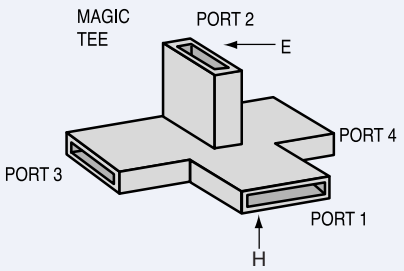

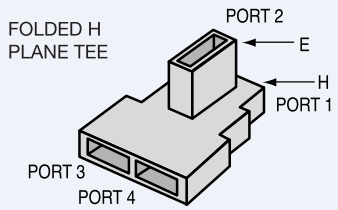

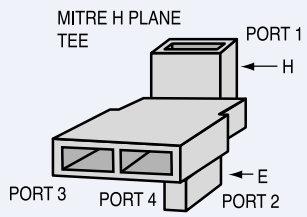

FEEDING E ARM
The collinear arms are in phase.

FEEDING H ARM
The collinear arms are 180˚ out of phase.

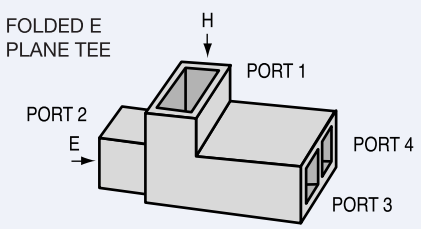

Theory

MDL produces a broad line of magic tees to fit a variety of waveguide sizes. In most MDL tees, the collinear arms are folded to form a common wall at either the broad waveguide surface or the narrow waveguide surface. These are commonly called E or H plane folded tees to differentiate them from the classic magic tee. MDL's E and H plane tees are electrically identical to the magic tees in theory, and generally superior in performance. To eliminate confusion in designating various waveguide ports, the illustrations at the left indicate the correct terminology and the phase relationships.

The need for H plane tees arose with the advent of the differential circulator. The compact E plane tees were developed for antenna projects and other programs with space limitations. The generally improved performance of the new folded tees over the existing magic tee designs resulted in their use in many other waveguide circuits.

Mitered H plane tees were developed for use in single sideband generators, image rejection mixers and sub-assemblies. Because of their configuration, an even greater reduction in package size is possible.

The tees are true hybrid couplers when all the ports are reflectionless. Feeding the E or H arms results in an equal power split in the collinear arms while the fourth port is isolated to a high degree. Both the power division and E to H isolation are achieved by physical symmetry. The equal power split property is easily visualized by a study of the structure of the tee; the isolation can be explained by a simple vector-mechanical analogy. However, newcomers in the microwave field are not generally aware that feeding one of the collinear arms creates an equal power split between the E and H ports, while the other collinear arm remains isolated. The physical appearance of the tee makes this phenomenon even more unexpected, and may be the reason for the name "magic" tee.

Perhaps not obvious to microwave novices is the ability of any four-port tee junction, when used as a simple power divider with either the E or H arms terminated, to exhibit much better power balance characteristics than the simpler symmetrical three-port tee junction. This is true in most applications where the loads are less than ideal.

Most MDL tees that cover 10 to 15% bandwidths have power splits with 0.1 db equality or better, regardless of which port is used as the input. The isolation between perpendicular ports is over 40 db and the isolation between collinear arms is 25 db or better.

Section 15

Folded Hybrid and Magic Tees and Transducers

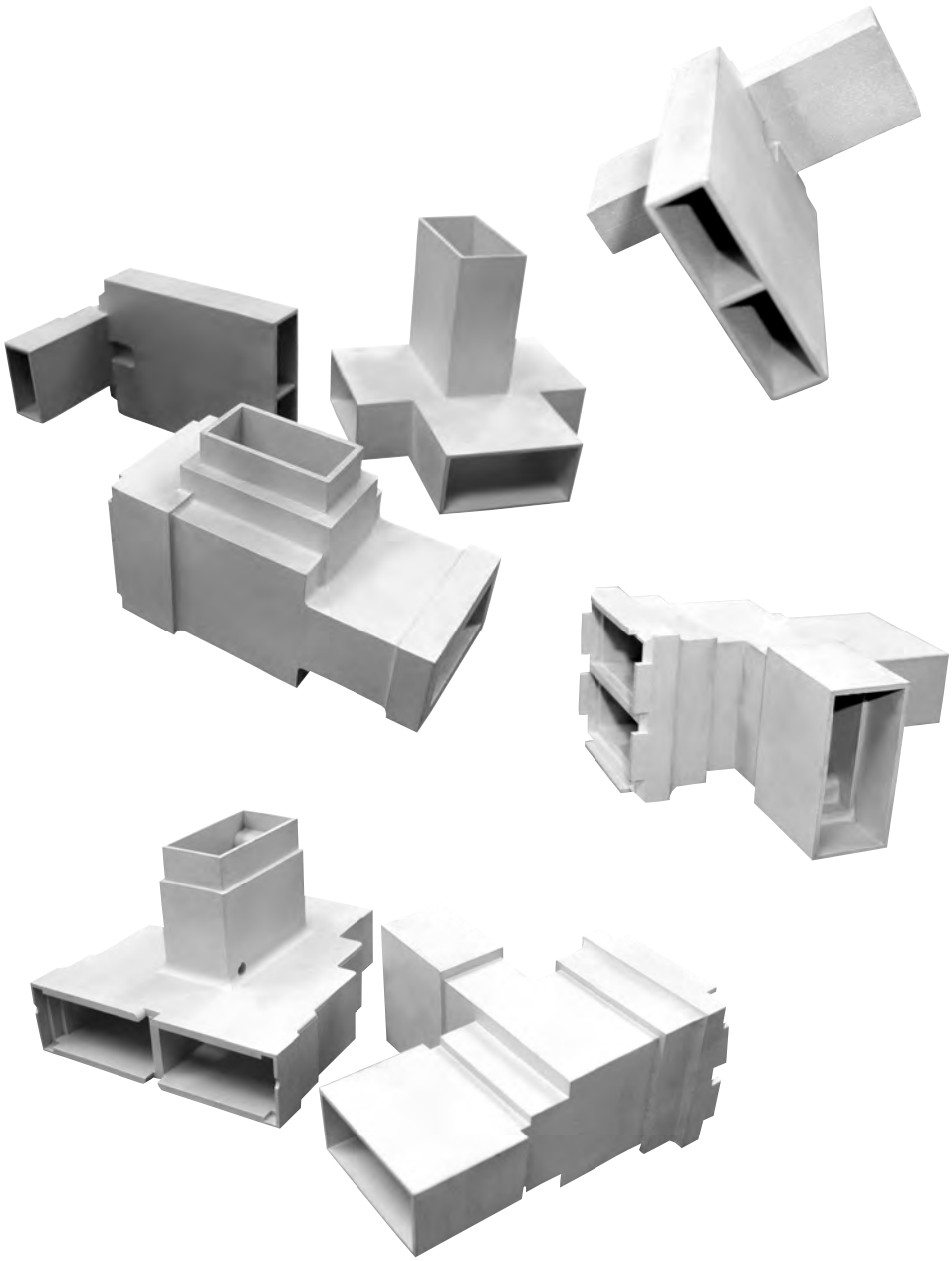

Theory

Each MDL folded hybrid tee is completely tested for VSWR characteristics of the E and H arms, for power split feeding the same arms, and for isolation between the E & H arms. The isolation between parallel arms is not measured but the figures given in the catalog are guaranteed. In most cases the guarantee is based on the lowest theoretical isolation, which is a function of the match of the E and H arms. In the few cases where our guarantee exceeds the theoretically worst figures, measurements have been made on a sample basis. A simple rule of thumb regarding reflections is the collinear arms is that they will never exceed the average reflection coefficient of the perpendicular arms. Thus, a tee which has a maximum VSWR of 1.10 in the H arm and 1.15 in the E arm, will have reflection coefficients of .05 and .07 respectively. The average reflection coefficient is .06. This means that the maximum VSWR of the collinear arms is $1+.06/1-.06 \approx 1.12$

Using the same sample, the isolation between collinear ports will have a voltage ratio no greater than .06 or approximately 25 db. In no case will the highest theoretical VSWR occur simultaneously with the lowest theoretical isolation. MDL tees are guaranteed to equal or exceed stated specifications. Typical wide-band performance curves are available.

Licensed H.A.C. pat. 2,840,787

H Plane Folded Hybrid Tees

H PLANE FOLDED HYBRID TEES

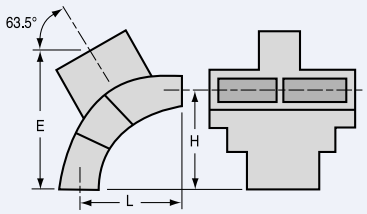

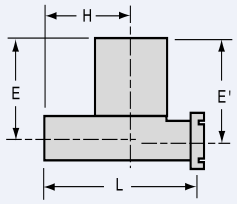

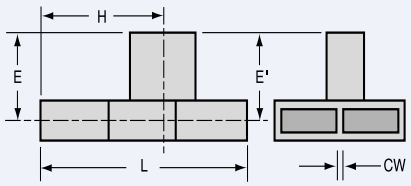

	Electrical Data								Mechanical Data						
			*VSWR Maximum		Isolation DB Min Between				Dimensions (inches)				Terminations		
W/G Size	Frequency GHz	Model Number	H Arm	E Arm	E & H Arms	Parallel Arms	Unbalanced DB Max.		L	E	H	Common Wall Thickness (inches)	E & H Arms	Parallel Arms	Recommended Dual Flange [12]
WR10	91.75-95.75	10TH16[2]	1.25	1.25	34	19	.25		1.12	0.38	0.56	.040	Cover[16] Flange	50FS12	10FS12
WR15	50.0-60.0	15TH26[2]	1.30	1.30	35	18	.25		1.00	0.56	0.50	.040	UG385/U	15FS52	15FS52
	67.0-73.0	15TH16[2]	1.30	1.30	35	18	.25								
WR22	43.5-45.5	22TH12	1.15	1.15	40	-	.20		1.04	0.60	0.60	.040	WG	CORRAL	-
WR28	29.0-33.2	28TH42	1.25	1.25	35	22	.25		0.97	0.72	0.48	.040	WG	CORRAL	28FS12
	33.0-39.5	28TH22	1.35	1.35	35	22	.25								
	34.0-36.0	28TH12	1.20	1.20	35	22	.25								
WR42	20.2-21.2	42TH22	1.20	1.20	40	20	.15		1.26	0.71	0.71	.090	WG	CORRAL	42FS32
	22.5-26.0	42TH12	1.15	1.20	35	25	.10		0.95	0.76	0.48	.090	WG	CORRAL	42FS32
WR51	16.0-17.0	51TH22	1.12	1.15	40	28	.10		1.00	0.92	0.66	.040	WG	CORRAL	51FS12[3]
	16.50-19.65	51TH12	1.15	1.15	40	28	.10		1.39	0.92	0.80	.040	WG	CORRAL	51FS12[3]
WR62	12.4-14.5	62TH32	1.10	1.10	40	28	.10		1.75	0.92	0.91	.040	WG	CORRAL	62FS52
	14.5-15.0	62TH32	1.15	1.15	40	25	.10								
	13.5-15.6	62TH12	1.12	1.10	40	28	.10		1.61	0.91	0.92	.040	WG	CORRAL	62FS52[3]
	15.0-17.5	62TH22	1.12	1.10	40	28	.10		1.81	0.81	0.95	.090	WG	CORRAL	62FS92
	15.5-17.0	62TH42	1.08	1.10	40	30	.10								
WR75	10.5-11.7	75TH12	1.10	1.10	40	28	.10		1.77	0.92	0.80	.050	WG	CORRAL	75FS12
	11.0-12.85	75TH22	1.15	1.15	40	25	.10		1.96	1.09	1.10	.050	WG	CORRAL	75FS12
WR90	8.2-10.0	90TH32	1.15	1.25	40	24	.10		2.78	1.75	1.50	.120	WG	CORRAL	90FS112
	8.5-9.6	90TH32	1.10	1.12	40	28	.10								
	8.5-9.6	90TH52	1.12	1.20	40	24	.10		1.47	1.12	0.75	.050	WG	CORRAL	90FS82[3]
	8.5-9.6	90TH12	1.10	1.10	40	28	.10		2.22	1.75	1.50	.050	WG	CORRAL	90FS82[3]
	8.5-9.6	90TH42	1.06	1.10	45	32	.10		2.78	1.75	1.50	.120	WG	CORRAL	90FS112[3]
	8.65-11.0	90TH62	1.25	1.25	40	20	.10		2.53	1.75	1.50	.120	WG	CORRAL	90FS112[3]
	8.8-11.2	90TH72	1.25	1.25	30	18	.10		1.27	1.12	0.82	.050[13]	COR.	CORRAL	NONE
	9.2-10.0	90TH72	1.15	1.15	35	25	.10								
	10.2-12.4	90TH102	1.20	1.15	40	28	.10		2.18	1.18	1.20	.120	WG	CORRAL	90FS112
WR90 tapered to WR112	8.5-9.6	90TH22	1.10	1.10	40	28	.10		2.41	E=1.25 E'=1.30	1.50	.120	WR112 WG	WR90 CORRAL	90FS122
WR90 200 Hgt.	9.0-10.8	A90TH12	1.10	1.10	40	28	.10		2.00	0.98	1.10	.050	WG	CORRAL	
WR102	9.5-10.5	102TH12	1.10	1.10	40	28	.10		2.75	1.75	1.56	.150	WG	CORRAL	

Notes: **All tees exhibit reasonable electrical characteristics over a broader frequency range than specified. Maximum VSWR's specified does not indicate typical performance but only the highest VSWR over the operating range of the tee.*

[2] Available only in copper alloy with flanges.
[3] This flange is integral cast to the tee.
[7] Add 0.17 to Dimension "L" when using recommended dual flange.
[8] E=E' and H=H' unless otherwise shown.
[9] Available only in non-brazable aluminum with flanges.
[10] Available only in aluminum with flanges.
[12] SEE FOOTNOTE ON NEXT PAGE
[13] No physical commonwall. 0.050 commonwall required by mating component to function electrically.
[15] No physical commonwall. 0.160 commonwall required by mating component to function electrically.
[16] Similar to UG387/U

H Plane Folded Hybrid Tees

Electrical Data								Mechanical Data						
			*VSWR Maximum		Isolation DB Min Between							Terminations		
W/G Size	Frequency GHz	Model Number	H Arm	E Arm	E & H Arms	Parallel Arms	Unbalance DB Max.	Dimensions (inches) L	E	H	Common Wall Thickness (inches)	E & H Arms	Parallel Arms	Recommended Dual Flange [12]
WR112	7.0-8.75	112TH32	1.25	1.25	40	20	.10	2.87	1.44	1.56	.150	WG	CORRAL	112FS82[3]
	7.5-8.5	112TH42	1.10	1.10	40	28	.10							
	7.8-9.6	112TH82	1.25	1.50	40	20	.10	2.75	1.25	1.56	.150	WG	CORRAL	112FS82[3]
	8.25-10.25	112TH62	1.15	1.15	40	25	.10	2.75	1.25	1.56	.150	WG	CORRAL	112FS82[3]
	8.5-9.6	112TH72	1.10	1.15	40	25	.10							
	8.5-9.6	112TH52	1.10	1.10	40	30	.10	2.75	1.25	1.56	.064	WG	CORRAL	112FS62[3]
	8.5-9.6	112TH12	1.08	1.10	40	30	.10	2.75	1.25	1.56	.150	WG	CORRAL	112FS82[3]
WR137	5.4-5.9	137TH62	1.10	1.10	40	28	.10	4.11	2.15	1.95	.150	WG	CORRAL	137FS32[3]
	5.9-6.5	137TH22	1.10	1.10	40	28	.10	3.81	1.75	2.25	.150	WG	CORRAL	137FS32[3]
	6.0-7.0	137TH32	1.10	1.10	40	28	.10	3.81	1.56	2.25	.150	WG	CORRAL	137FS32[3]
	6.6-8.2	137TH42	1.15	1.15	40	25	.10							
	6.8-8.0	137TH72	1.10	1.10	40	28	.10							
WR137 tapered to WR187	5.4-5.9	137TH12	1.08	1.08	40	30	.10	4.34	E=1.44 E'=1.56	2.37	.150	WR187 WG	WR137 CORRAL	137FS42
A137 (I.D. 1.372-0.247) **tapered to WR137**	5.4-5.9	A137TH12	1.15	1.15	35	25	.10	3.50	E=1.65 E'=1.84	2.23	.150	WR137 WG	A137 CORRAL	FLANGE BLANK 3.56 x .87
WR159	5.4-5.9	159TH12	1.10	1.10	40	28	.10	3.98	2.18	2.15	.150	WG	CORRAL	NONE
	5.9-6.5	159TH22	1.10	1.15	40	26	.10	4.49	2.26	2.45	.150	WG	CORRAL	NONE
WR187	3.95-4.4	187TH42	1.10	1.10	40	28	.10	4.44	1.62	2.62	.150	WG	CORRAL	187FS32[3]
	4.4-5.0	187TH32	1.10	1.10	40	28	.10	4.41	2.23	2.34	.150	WG	CORRAL	187FS32[3]
	5.0-6.0	187TH22	1.10	1.15	40	28	.10	3.97	2.37	2.00	.128	WG	CORRAL	187FS12
	5.1-5.9	187TH12	1.10	1.10	40	28	.10							
WR229	3.7-4.2	229TH12	1.10	1.10	40	28	.10	5.64	2.92	3.03	.128	WG	CORRAL	FLANGE BLANK 6.21 x 2.42
WR284	2.6-3.2	284TH12	1.15	1.15	40	25	.10	6.09[7]	2.62	3.55	.160	WG	CORRAL	284FS12
	2.7-3.15	284TH22	1.10	1.10	40	28	.10							
	2.9-3.5	284TH42	1.18	1.12	40	25	.15	6.09	2.62	3.55	.160	WG	CORRAL	284FS12
	3.0-3.4	284TH52	1.10	1.10	40	28	.15	6.09	2.62	3.55	.160	WG	CORRAL	284FS12

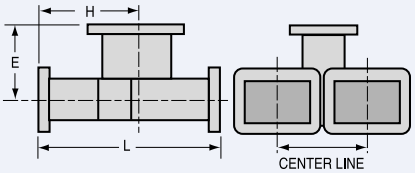

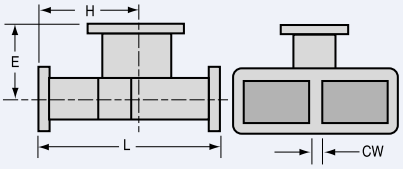

Notes: [3] *This flange is integral cast to the tee.*

[12]

10FS12 – Six 4-40 thread holes
15FS52 – Two 0.0630-0.0635 dia. holes, and Six 4-40 thread holes
28FS12 – Six 0.116 dia. holes
42FS32 – Four 0.166 dia. holes
51FS12 – Four 0.144 dia. holes
62FS52 – Four 0.144 dia. holes
62FS92 - Four 0.144 dia. holes
75FS12 - Four 0.125 dia. holes
90FS82 – Six 8.32 thread holes
90FS112 – Six 0.169 dia. holes
90FS122 – Six 8.32 thread holes
112FS62 – Ten 0.169 dia. holes
112FS82 – Ten 0.169 dia. holes
137FS32 – Ten 0.199 dia. holes
137FS42 – Ten 10-24 thread holes
187FS12 – Twelve 0.196 dia. holes
187FS32 – Twelve 0.196 dia. holes
284FS12 – Twelve 0.261 dia. holes
A284FS12 – Twelve 0.147 dia. holes

E Plane Folded Hybrid Tees

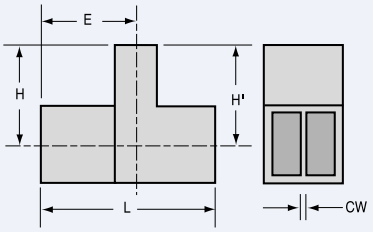

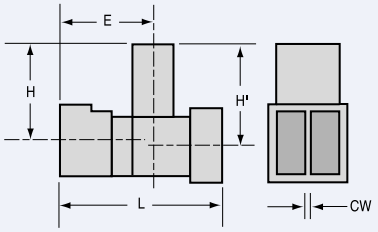

	Electrical Data							Mechanical Data						
			*VSWR Maximum		Isolation DB Min Between			Dimensions (inches)			Common Wall Thickness (inches)	Terminations		
W/G Size	Frequency GHz	Model Number	H Arm	E Arm	E & H Arms	Parallel Arms	Unbalanced DB Max.	L	E	H		E & H Arms	Parallel Arms	Recommended Dual Flange[12]
WR28	28.0-29.0	28TE12	1.80	1.40	35	15	.25	0.90	0.49	0.68	.040	WG	CORRAL	28FT12[3]
	29.0-40.0	28TE12	1.50	1.35	35	18	.25							
	30.0-35.0	28TE32	1.25	1.25	35	20	.25	0.90	0.49	0.68	.040	WG	CORRAL	28FT12[3]
	34.0-38.0	28TE22	1.25	1.20	35	22	.25	0.90	0.49	0.60	.040	WG	CORRAL	28FT12[3]
WR42	19.5-27.0	42TE12	1.80	1.35	35	15	.20	1.14[4]	0.72	0.98	.040	WG	CORRAL	42FT12
	20.0-24.0	42TE22	1.20	1.15	35	22	.20							
WR51	15.2-17.2	51TE22	1.15	1.15	35	25	.10	1.04	0.66	1.04	.040	WG	CORRAL	51FT12
WR51 tapered to WR62	16.0-17.0	51TE12	1.15	1.15	35	25	.10	1.42	0.94	H=0.97 H'=1.03	.090	WR62 WG	WR51 CORRAL	51FT12
WR62	12.4-17.5	62TE72	2.20	1.30	35	15	.15	1.65	1.03	1.40	.090	WG	CORRAL	62FT12[3]
	14.0-15.0	62TE22	1.50	1.25	35	15	.15							
	15.0-18.0	62TE22	1.40	1.25	35	18	.15	1.65[4]	1.03	1.40	.090	WG	CORRAL	62FT12[3]
	15.0-17.0	62TE32	1.20	1.20	35	22	.15							
	16.0-17.0	62TE12	1.15	1.15	35	25	.10	1.87	0.94	0.97	.090	WG	CORRAL	62FT12[3]
WR75	10.5-14.9	75TE12	1.70	1.25	35	16	.15	1.92[4]	1.27	1.76	.090	WG	CORRAL	75FT12
	10.9-13.1	75TE22	1.15	1.20	35	20	.15							
WR90	7.5-8.3	90TE22	1.85	1.25	35	16	.10	1.94[5]	1.30	1.50	.120	WG	CORRAL	90FT12[3]
	8.3-10.7	90TE22	1.25	1.15	35	20	.10							
	10.7-10.95	90TE22	1.85	1.15	35	16	.10							
	8.2-12.4	90TE32	3.00	1.25	30	10	.10	2.23	1.30	1.50	.120	WG	CORRAL	90FT12[3]
	8.8-12.2	90TE32	2.00	1.25	35	15	.10							
	8.5-9.6	90TE12	1.12	1.10	40	28	.10	1.94[5]	1.30	1.50	.120	WG	CORRAL	90FT12[3]
	9.0-10.25	90TE92	1.15	1.15	40	24	.10	1.94[5]	1.30	1.50	.120	WG	CORRAL	90FT12[3]
WR102	7.0-11.0	102TE12	1.80	1.15	40	18	.10	2.64	1.46	1.36	.150	WG	CORRAL	102FT12
WR112	7.5-8.5	112TE22	1.20	1.15	35	25	.10	2.33	1.50	2.00	.150	WG	CORRAL	112FT12[3]
	8.5-9.6	112TE32	1.15	1.12	40	25	.10	2.75	1.63	2.00	.150	WG	CORRAL	112FT12[3]
WR137	5.4-5.9	137TE12	1.10	1.10	40	28	.10	2.62	1.56	2.36	.150	WG	CORRAL	137FT12[3]
	5.4-6.8	137TE22	1.20	1.15	35	22	.10							
WR187	3.96-4.33	187TE22	1.10	1.10	40	28	.10	3.25	1.80	3.02	.150	WG	CORRAL	187FT12[3]
	5.4-5.9	187TE12	1.10	1.10	40	28	.10	4.00	2.23	2.56	.128	WG	CORRAL	187FT22[3]
WR229	3.7-4.2	229TE12[13]	1.15	1.10	40	25	.10	5.77	3.06	4.28	.150	WG	CORRAL	229FT12
WR284	2.6-3.0	284TE12	1.15	1.20	40	28	.10	4.64	2.97	4.67	.160	WG	CORRAL	284FT22
	2.9-3.5	284TE32	1.15	1.15	40	28	.10	4.64	2.97	4.67	.160	WG	CORRAL	284FT22

Notes: **All tees exhibit reasonable electrical characteristics over a broader frequency range than specified. Maximum VSWR's specified does not indicate typical performance but only the highest VSWR over the operating range of the tee.*

3 *This flange is integral cast to the tee.*

4 *Add 0.03 to Dimension "L" when using recommended dual flange.*

5 *Add 0.06 to Dimension "L" when using recommended dual flange.*

8 *E=E' and H=H' unless otherwise shown.*

9 *Available only in non-brazable aluminum with flanges.*

12

28FT12 – Four 0.116 dia. holes
42FT12 – Four 0.116 dia. holes
51FT12 – Four 0.144 dia. holes
62FT12 – Four 0.144 dia. holes
75FT12 – Four 0.144 dia. holes
90FT12 – Four 0.169 dia. holes
102FT12 – Four 0.169 dia. holes
112FT12 – Four 8.32 thread holes
137FT12 – Four 0.219 dia. holes
187FT22 – Four 0.219 dia. holes
229FT12 – Eight 0.257 dia. holes
284FT22 – Eight 0.257 dia. holes

13 *Fabricated unit sold only as a complete assembly.*

Magic Tees

Electrical Data							Mechanical Data			
W/G Size	Figure	Frequency GHz	Model Number+	VSWR Maximum H Arm	VSWR Maximum E Arm	Isolation DB Min Between E & H Arms	Unbalance DB	in inches L	in inches E	in inches H
WR28	1A	29.0-34.0	28TN16	1.25	1.25	35	±.20	0.75	0.50	0.50
WR42	1A	20.0-24.0	42TN16	1.25	1.30	40	±.20	1.12	0.83	0.75
WR51	1A	15.8-17.5	51TN16	1.15	1.15	40	±.10	1.52	1.12	1.09
WR62	1A	15.4-17.2	62TN26	1.30	1.20	40	±.15	1.02	0.870	0.84
WR75	1A	10.35-12.35	75TN16	1.25	1.25	40	±.10	2.50	1.49	1.67
WR90	1A	8.5-9.6	90TN16	1.25	1.30	40	±.10	2.30	1.47	1.14
	1A	9.0-10.2	90TN26	1.15	1.15	40	±.10	2.30	1.47	1.14
	3	8.9-9.4	A90TN12[B]	1.15	1.22	35	±.15	2.00	.70	1.00
	2	8.8-10.06	A90TN22[A] FOLD E	1.35	1.35	30	±.25	1.96	.29	.68
	4	8.5-9.6	C90TN12[C]	1.20	1.25	35	±.10	2.00	.56	.75
WR112	1B	8.5-9.6	112TN16[E]	1.10	1.15	40	±.10	3.20	1.60	1.60
	1B	7.0-7.6	112TN26[E]	1.35	1.25	40	±.10	3.20	1.60	1.60
WR137	1A	5.4-5.9	137TN16	1.15	1.10	40	±.10	3.62	1.90	1.90
	1A	5.9-6.5	137TN26	1.30	1.25	40	±.10	3.62	1.90	1.90
WR159	1A	5.1-5.95	159TN16	1.15	1.15	40	±.10	4.25	2.12	2.12
WR187	1A	5.4-5.9	187TN16	1.15	1.15	40	±.10	3.68	2.68	2.52
WR284	1A	2.9-3.5	284TN16[D]	1.25	1.25	40	±.10	4.40	3.53	3.53
	1A	3.1-3.5	284TN26[D]	1.15	1.20	40	±.10	4.40	3.53	3.53

Notes: + *Model Numbers represent unit dimensions without flanges.*
See page 46 for ordering information on flange combinations.

A *.200 Height.*
B *.200 Height. E arm corral cast for .030 W/G wall.*
C *.150 Height. Outputs corraled, E and H arms male W/G.*
D *Supplied in Alum only.*
E *Supplied with flanges only, per figure 1B.*

1 = Supplied in figure 1A or 1B configuration.

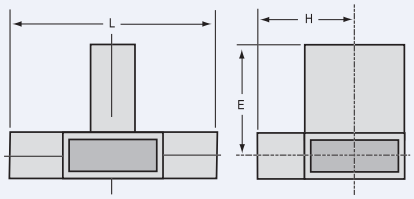

FIG. 1A (No Flanges)

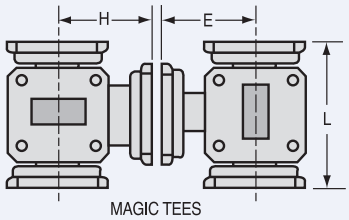

FIG. 1B (With Flanges)

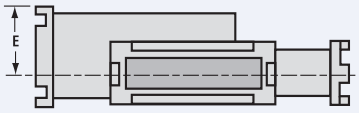

FIG. 2

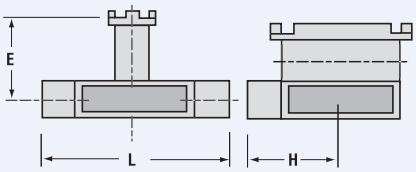

FIG. 3

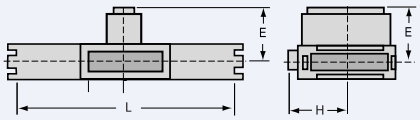

FIG. 4

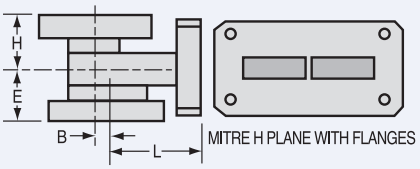

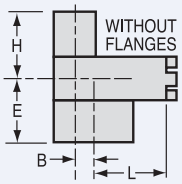

Mitre H Plane Tees

Mitre H Plane with Flanges

W/G Size	Frequency GHz	Model Number	*VSWR Maximum H Arm	*VSWR Maximum E Arm	Isolation DB Min Between E & H Arms	Isolation DB Min Between Parallel Arms	Unbalance DB	Dimensions (inches) L	Dimensions (inches) E	Dimensions (inches) H	Dimensions (inches) B	Common Wall Thickness (inches)	Dual Output Terminal	Recommended Dual Flange12
WR28	33.5-36.0	28TC16	1.25	1.25	40	20	±.10	.665	.310	.310	.070	.040	FLANGE	28FS12
	30.0-38.5	28TC26	1.50	1.50	40	10	±.10	.665	.310	.310	.070	.040	FLANGE	28FS12
WR42	18.0-26.0	42CT16	1.70	1.50	40	10	±.10	.610	.320	.320	.040	.040	FLANGE	42FS12
WR51	16.0-17.0	51TC16	1.10	1.15	40	25	±.10	.831	.388	.388	.128	.040	FLANGE	51FS12
	15.5-18.0	51TC26	1.15	1.20	40	22	±.10	.831	.388	.388	.128	.040	FLANGE	51FS12
WR62	15.5-17.2	62TC16	1.15	1.15	40	23	±.10	.835	.480	.361	.156	.040	FLANGE	62FS52
	15.0-17.5	62TC26	1.20	1.30	40	19	±.10	.835	.840	.361	.156	.040	FLANGE	62FS52
	13.0-13.5	62TC36	1.20	1.20	40	23	±.10	.835	.516	.516	.156	.040	FLANGE	62FS52
	12.5-14.0	62TC46	1.35	1.18	40	19	±.10	.835	.516	.516	.156	.040	FLANGE	62FS52
WR90	8.5-9.6	90TC16	1.30	1.20	40	21	±.10	.983	.410	.680	.250	.050	FLANGE	90FS72
	8.2-10.4	90TC26	1.45	1.40	40	15	±.10	.983	.410	.680	.250	.050	FLANGE	90FS72
WR112	6.8-8.2	112TC16	1.30	1.30	40	17	±.10	1.216	.620	1.041	.312	.064	FLANGE	112FS62
	6.5-8.5	112TC26	1.60	1.50	40	14	±.10	1.216	.620	1.041	.312	.064	FLANGE	112FS62

Mitre H Plane Without Flanges

								L STD.	L MIN.	E STD.	E MIN.	H STD.	H MIN.	C/W	OUT TERM	B
WR28	33.5-36.0	28TC12	1.25	1.25	40	20	±.10	.665	.213	.310	.236	.310	.150	.040	WG	.070
	30.0-38.5	28TC22	1.50	1.50	40	15	±.10	.655	.213	.310	.236	.310	.150	.040	WG	.070
WR42	18.0-26.0	42TC12	1.70	1.50	40	10	±.10	.610	.387	.320	.165	.320	.254	.040	WG	.125
WR51	16.0-17.0	51TC12	1.10	1.15	40	25	±.10	.335	.315	.388	.388	.388	.388	.040	CORRAL	.128
	15.5-18.0	51TC22	1.15	1.20	40	23	±.10	.335	.315	.388	.388	.388	.388	.040	CORRAL	.128
WR62	15.5-17.2	62TC12	1.15	1.15	40	23	±.10	.511	.427	.480	.480	.288	.361	.040	CORRAL	.156
	15.0-17.5	62TC22	1.20	1.30	40	19	±.10	.511	.427	.480	.480	.361	.288	.040	CORRAL	.156
	13.0-13.5	62TC32	1.20	1.20	40	23	±.10	.361	.321	.361	.246	.361	.246	.040	CORRAL	.156
	12.5-14.0	62TC42	1.35	1.18	40	19	±.10	.321	.361	.361	.246	.361	.246	.040	CORRAL	.156
WR90	8.5-9.6	90TC12	1.30	1.20	40	21	±.10	.983	.500	.410	.300	.680	.680	.050	CORRAL	.250
	8.2-10.4	90TC22	1.45	1.40	40	15	±.10	.983	.500	.410	.300	.680	.680	.050	CORRAL	.250
WR112	6.8-8.2	112TC12	1.30	1.30	40	17	±.10	1.070	.690	.450	.380	.950	.850	.064	WG	.312
	6.5-8.5	112TC22	1.60	1.50	40	13	±.10	1.070	.690	.450	.380	.950	.850	.064	WG	.312

Transducers

Dual mode transducers, capable of separating horizontal and vertical polarized waves, are readily available in most waveguide sizes. MDL's investment castings provide rigid, compact construction to insure precise mechanical configuration and excellent electrical performance. These designs feature low VSWR and insertion loss, high isolation and power handling capabilities.

Square output openings are standard except where noted. Circular outputs, other than those shown in the data below, and special flanges can be supplied upon request.

MITRE H PLANE TEES

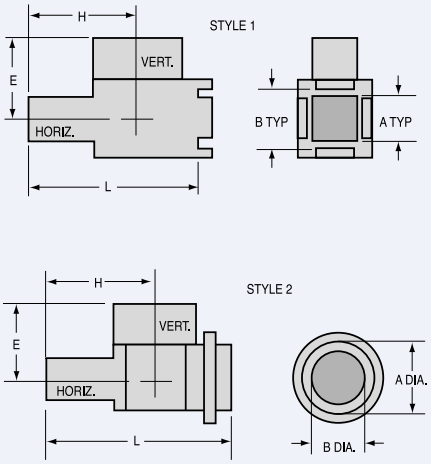

W/G Size	Frequency GHz	Style	Model Number	*VSWR Maximum H Arm	*VSWR Maximum E Arm	Mechanical Dimensions† H	Mechanical Dimensions† E	Mechanical Dimensions† L	Output Dimensions A	Output Dimensions B	
Dual Mode Transducers											
WR22	35.5-37.5	1	22TR12	1.25	1.25	0.35	0.35	0.55	0.220	0.252	+.003 -.000
WR28	34.0-36.0	1	28TR12	1.20	1.20	0.50	0.43	0.81	0.204	0.286	+.002 -.000
WR42	19.5-23.0	1	42TR12	1.30	1.20	0.75	0.60	1.50	0.340	0.425	+.003 -.000
WR51	16.0-17.0	1	51TR12	1.15	1.15	1.00	0.79	1.50	0.454	0.536	+.003 -.000
	15.65-17.1	2	51TR22	1.15	1.20	0.75	1.20	1.32	0.600	0.500	±.005
WR62	13.0-14.0	1	62TR22	1.15	1.15	1.10	0.95	1.80	0.562	0.645	+.003 -.000
	14.0-15.0	1	62TR32	1.12	1.12	1.10	0.85	1.80	0.519	0.599	+.003 -.000
	15.0-17.0	1	62TR12	1.15	1.15	1.10	0.95	1.80	0.454	0.536	+.003 -.000
WR75	10.8-11.5	1	75TR12	1.15	1.10	1.28	1.15	1.98	0.678	0.780	+.003 -.000
WR90	8.5-9.6	1	90TR12	1.10	1.10	1.75	1.35	2.50	0.800	0.905	+.003 -.000
	9.2-10.2	1	90TR22	1.25	1.25	1.75	1.35	2.50	0.800	0.905	+.003 -.000
WR112	7.0-8.0	1	112TR12	1.15	1.15	2.04	1.34	3.04	0.995	1.128	+.004 -.000
	7.0-8.0	2	112TR22	1.15	1.15	2.04	1.34	3.04	1.288	1.160	±.005
	7.3-8.3	1	112TR32	1.55	1.45	2.04	1.34	3.04	0.995	1.128	+.004 -.000
WR137	5.4-5.9	1	137TR12	1.10	1.10	2.18	1.13	3.68	1.372	1.503	+.005 -.000
	5.4-5.9	1	137TR22	1.10	1.10	2.18	1.58	3.68	1.372	1.503	+.005 -.000
WR284	2.6-3.2	1	284TR32	1.50	1.15	4.16	3.30	6.63	2.525	2.690	+.008 -.000
	2.65-3.1	1	284TR12	1.20	1.15	4.16	3.30	6.63	2.525	2.690	+.008 -.000
	2.7-3.1	1	284TR22	1.15	1.12	4.16	3.30	6.63	2.525	2.690	+.008 -.000

Notes: *Minimum isolation 40 db*
† *Dimensional tolerances*
WR22 through WR137±.015
WR284±.020

Transducers

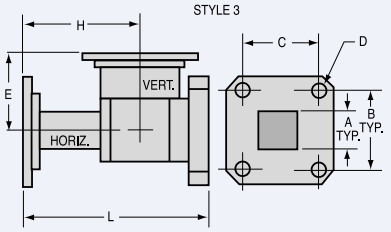

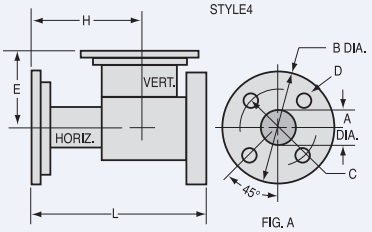

FIG. A

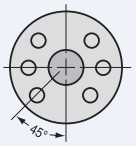

FIG. B

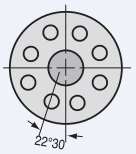

FIG. C

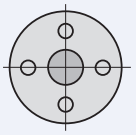

FIG. D

FIG. E

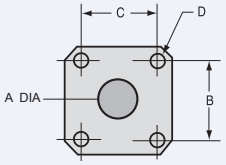

W/G Size	Frequency GHz	Style	Model Number	*VSWR Maximum H Arm	*VSWR Maximum E Arm	Mechanical Dimensions† H	E	L	A	B	C	D	Flange pattern
WR28	34.0-36.0	3	28TR16	1.20	1.20	0.50	0.54	0.81	.204	.500	.530	.116	-
	34.0-36.0	4	28TR26	1.20	1.20	0.50	0.54	0.997	.238	.500	.530	THD	FIG. E
WR42	19.5-23.0	4	42TR36	1.30	1.20	0.91	0.76	1.520	.400	1.135	.670	.116	FIG. A
WR51	16.0-17.0	3	51TR16	1.15	1.15	1.00	1.10	1.50	.454	.956	.994	.144	-
	15.65-17.1	4	51TR26	1.15	1.20	1.00	1.10	1.57	.500	1.350	.925	.144	FIG. A
WR62	15.0-17.0	3	62TR16	1.15	1.15	1.10	1.18	1.80	.454	.956	.944	.144	-
	13.0-14.0	3	62TR26	1.15	1.15	1.17	1.00	1.87	.562	.956	.994	.144	-
	14.0-15.0	3	62TR36	1.12	1.12	1.10	0.95	1.68	.519	.956	.994	.144	-
	13.75-15.25	4	62TR46	1.30	1.20	1.15	1.18	1.855	.590	1.300	1.000	6-32 THD	FIG. D
	15.0-17.0	4	62TR56	1.20	1.20	1.10	1.18	1.80	.590	1.500	1.070	.144	FIG A.
WR75	10.8-11.5	3	75TR16	1.15	1.10	1.28	1.15	1.98	.678	1.10	1.10	.144	-
WR90	8.5-9.6	3	90TR36	1.10	1.10	1.75	1.35	2.50	.800	1.280	1.220	.169	-
	9.2-10.2	3	90TR46	1.25	1.25	1.75	1.35	2.50	.800	1.280	1.220	.169	-
	8.5-9.6	4	90TR56	1.25	1.25	1.75	1.35	2.500	.930	1.600	1.360	8-32 THD	FIG. D
WR112	7.0-8.0	3	112TR16	1.15	1.15	2.04	1.34	3.04	.995	1.474	1.352	.169	-
	7.2-7.8	4	112TR26	1.15	1.15	2.27	1.50	2.98	1.160	2.34	1.75	.169	FIG. B
	7.3-8.3	3	112TR36	1.55	1.45	2.04	1.34	3.04	.995	1.474	1.352	.169	-
	7.3-8.3	4	112TR46	1.55	1.45	2.27	1.50	2.98	1.160	2.34	1.76	.169	FIG. B
WR137	5.4-5.9	3	137TR16	1.10	1.10	2.33	1.58	3.83	1.372	2.250	2.125	10.32 THD	-
WR284	2.65-3.1	3	284TR16	1.20	1.15	4.16	3.30	6.63	2.525	8 HOLE FLANGE 284FT22	-	.257	-
	2.7-3.1	3	284TR26	1.15	1.12	4.16	3.30	6.63	2.525		-	.257	-
	2.6-3.2	3	284TR36	1.50	1.15	4.16	3.30	6.63	2.525		-	.257	-
	2.7-3.1	4	284TR46	1.20	1.17	4.16	3.30	7.75	2.940	6.50	-	.257	FIG. C
	2.7-2.9	4	284TR56	1.20	1.20	4.16	3.30	7.75	2.940	6.50	-	.257	FIG. C

Notes: *Minimum isolation 40dB*
**Dimensional tolerances WR22 through WR137±.015*
WR284±.020

Section 16

Short Slot Hybrids

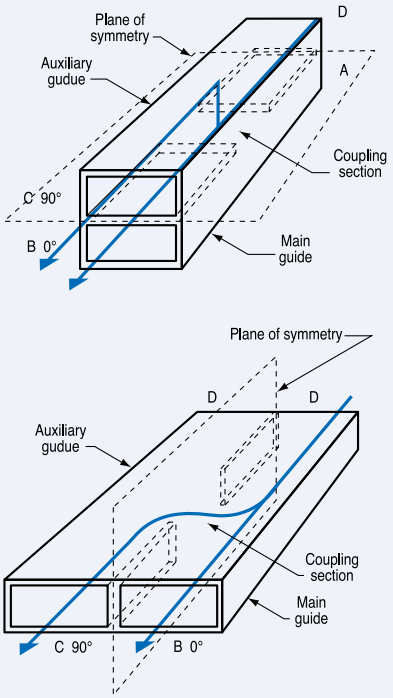

FIGURE 1 – COUPLER TERMINOLOGY

Coupling = Ratio A to C
Balance = Ratio B to C
Directivity = Ratio C to D
Isolation = Ratio A to D
Isolation = Coupling + Directivity

PHASE DIFFERENCE AT OUTPUTS

Sidewall C lags B by 90˚
Topwall C leads B by 90˚
Note: In a sidewall hybrid, add 1/4 wave length to B arm for equal phase at output.

Theory

These couplers have a plane of symmetry running the full length of the unit, and are comprised of two waveguides side by side with a portion of the common wall removed to permit coupling between the two sections. Since these units are symmetrical, any of the four arms may be used as an input without impairing its performance.

In MDL short-slot 3 dB (hybrid) couplers the incoming power divides equally between the two output terminals. With the remaining arm isolated, this structure then becomes an ideal hybrid junction. If the output terminals (B&C) are short-circuited, the energy is reflected without relative phase shift. Voltages in the input arm (A) arising from reflections at short-circuit (C) experience an additional 90° phase shift, and thus cancel those which are reflected from short-circuit (B). The reflections arriving in arm (D) arising from the reflections at short-circuit (B) experience a 90° phase shift and thus reinforce those reflected from short-circuit (C).

Engineering Information

Most standard MDL 3 dB short slot (hybrid) couplers have a normal output power unbalance of 0.25 dB max., (a coupling of 3dB ± 0.125 dB) and an isolation exceeding 30 dB in applications up to and including 15% band width. The terminated VSWR is a function of isolation, and can be determined from the chart below. Generally, the VSWR is less than 1.07.

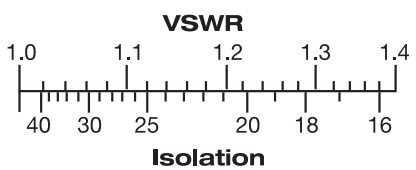

Each hybrid is designed for optimum isolation and flat balance response over as broad a band as possible. In a sidewall hybrid, the power out of the auxiliary arm lags the power out of the main arm, while in a topwall hybrid the power of the auxiliary arm leads the main arm (See Fig. 1). The parameters that cause phase error are:

1. Non-symmetry (seldom exceeds 2°)
2. A function of isolation, approximately equal to 2 $\tan^{-1} \int\tilde{}2$, where $\int\tilde{}$ is isolation in voltage ratio. This can account for slightly over 0.1° error with 30 dB isolation.

Section 16

Short Slot Hybrids

Terminology

The terms “Coupling,” “Balance,” “Directivity” and “Isolation” are occasionally misused. Coupling is the ratio of input power to the auxiliary guide output power while Balance is the ratio of the main guide output power to the auxiliary guide output power.

Directivity is the ratio of forward to reverse power in the auxiliary guide while isolation is the ratio of the main guide input power to reverse power in the auxiliary guide. Isolation is equal to coupling + directivity.

These and other common terms are illustrated and defined in Fig. 1. All Terms in Fig. 1 are expressed in decibels.

The graph illustrates the relationship between coupling and balance.

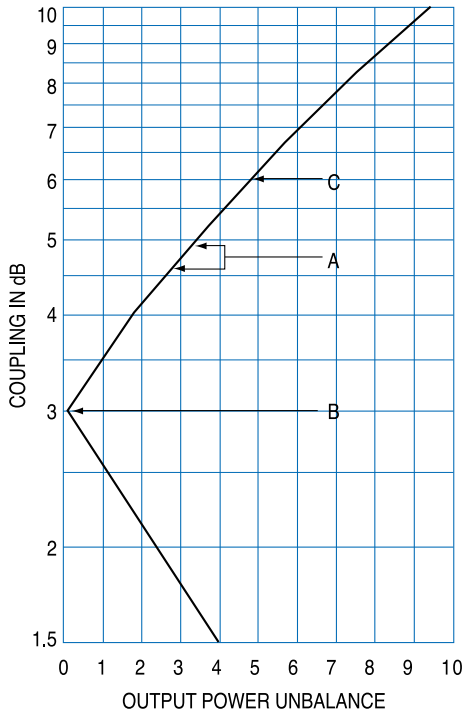

Examples:
A coupler having an unbalance specified as 3.0±.25 dB is shown to have a coupling value ranging from 4.93 (3.0+.25) to 4.6 dB (3.0-.25)

A coupler with an unbalance of 0.0 dB would have a coupling value of 3 dB

A 6 dB coupler would have an unbalance of 4.75 dB

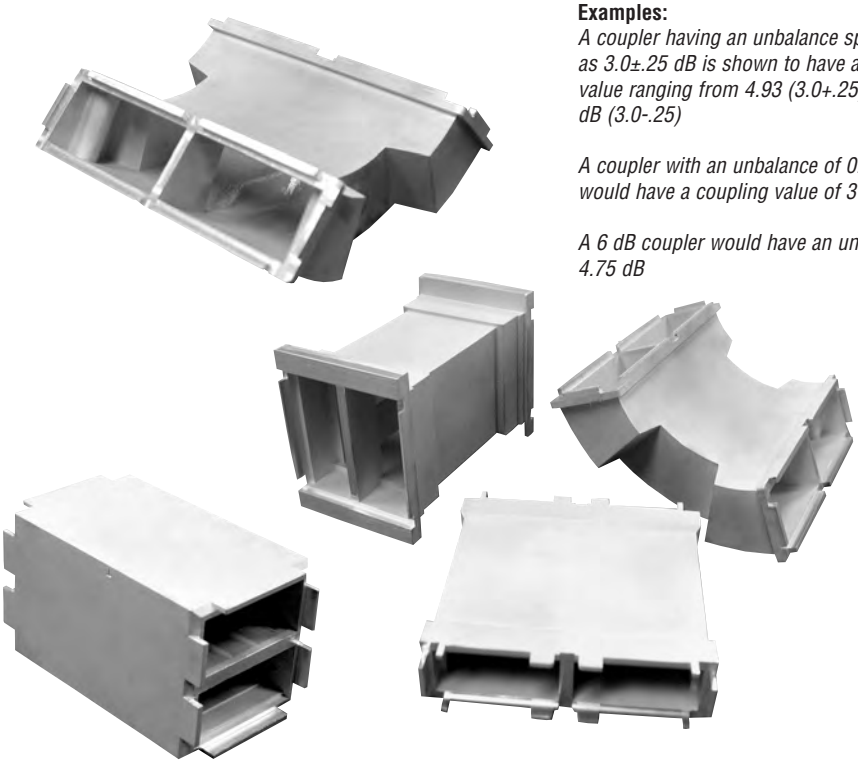

Introduction

MDL has prepared this section as an up to date guide in the selection of short-slot couplers. This section is divided into four major groups: sidewall 3 dB couplers, topwall 3 dB couplers, sidewall couplers other than 3 dB and topwall couplers other than 3dB. These major groups are sub-divided into EIA waveguide size (WR10 thru 284).

MDL short-slot couplers, because of their uniplanar construction, simplify packaging, particularly where space is limited. Models are also available in 90° and 180° bends, narrow height waveguide and tapers from one guide to another.

The short-slot 3 dB (hybrid) couplers are ideal for compact power dividers, bridge circuits, duplexers, diplexers, monopulse comparators, balanced mixers, etc. MDL, the pioneer and largest manufacturer of short-slot couplers can produce a unit to meet your requirements. Quotations and inquiries are invited.

Sidewall Couplers – 3dB

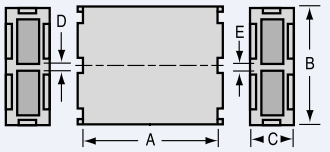

STYLE 1A

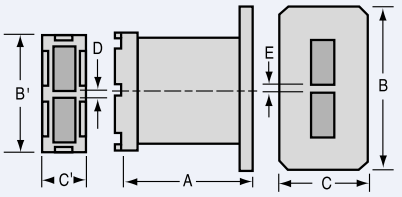

STYLE 1B

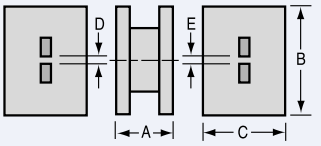

STYLE 1C

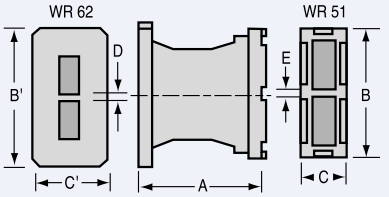

STYLE 5B

W/G Size	Frequency GHz	Style	Model Number	Dimensions (inches) A	B	C	D	E
WR22	43.5-45.5	1A	22HS12	.440	.648	.280	.040	.040
WR28	26.5-29.5	1A	28HS42	.550	.77	.30	.040	.040
	26.0-30.0▲							
	27.5-31.2	1A	28HSA22	.550	.77	.30	.040	.040
	30.0-34.0	1A	28HS52	.550	.76	.30	.040	.040
	34.0-36.0	1A	28HS32	.550	.77	.30	.040	.040
	33.5-37.0▲							
	36.0-40.0	1A	28HS62*	.550	.77	.30	.040	.040
WR42	17.6-20.0	1A	42HS42	.900	1.11	.31	.090	.090
	17.6-20.0	1B[1]	42HS14	.900	1.39B 11.1B	.87C .32C	.090	.090
	17.6-20.0	1C[1]	42HS24	.900	1.39	.87	.090	.090
	19.3-22.0	1A	42HS32	.900	1.11	.29	.090	.090
	23.0-25.5	1A	42HS12	.900	1.09	.33	.040	.090
	22.5-26.0▲							
WR42 90°	23.0-25.0	2A	42HS22	.500(R)	1.07	.31	.040	.090
WR51	15.5-17.5	1A	51HS62	1.375	1.33	.47	.090	.090
	16.0-17.0■	1A	51HS22	1.375	1.33	.47	.090	.090
	17.35-19.65	1A	51HS12	1.125	1.22	.42	.040	.040
	17.35-19.65	1A	51HS32	1.125	1.27	.42	.090	.090
WR51 Tapered to	15.5-16.5	5B[5]	51HS42	1.250	1.27B 1.75B'	.42C 1.31C'	.040	.090
WR62	15.5-16.5	5B[7]	51HS52	1.250	1.27B 1.75B'	.42C 1.31C'	.040	.090
WR62	12.4-14.0	1A	62HS22	1.110	1.45	.48	.040	.040
	12.4-14.0	1A	62HS132	1.110	1.50	.48	.090	.090

Except as Noted Output power Unbalance (dBmax.) ±0.25 Isolation (db min.) 30

Notes: X *Unbalance ±.50 dB max. Isolation 25 dB min.* * *Isolation 28 dB min.*

■ *Unbalance ±.15 dB max.*

▲ *These models have been tested and exhibit reasonable electrical characteristics over extended frequency range. Specific data available on request.*

1 *Dual flat flange with four .116 dia. cleared holes 42FS32*

2 *Dual flat flange with six .120 dia. cleared holes 10FS22*

3 *Material BECU only*

5 *Dual sidewall flat flange four 0.144 dia. holes 62FS52*

7 *Dual choke pressure flange 62FS12 four 0.144 dia. holes*

NOTE: All hybrids corrals mate with standard W/G (WR size noted in the table on Page 51) having a common wall of the thickness shown by dimensions D and E.
Socket dimensions & overall tolerances shown on Page 44.

Sidewall Couplers – 3dB

W/G Size	Frequency GHz	Style	Model Number	Dimensions (inches) A	B	C	D	E
WR62 (cont.)	12.4-14.0	1B[6]	62HS54	1.250	1.75B 1.46B'	1.31C .48C'	.040	.040
	13.0-15.0*	1A	62HS162	1.250	1.50	.48	.090	.090
	13.5-15.6	1A	62HS122	1.250	1.50	.48	.090	.090
	13.5-15.6	1A	62HS12	1.250	1.45	.48	.040	.040
	13.5-15.8	1B[6]	62HS64	1.250	1.75B 1.46B'	1.31C .48C'	.040	.040
	15.0-17.0	1A	62HS32	1.110	1.45	.48	.040	.040
	15.0-17.0	1A	62HS152	1.110	1.50	.48	.090	.090
	15.5-17.5	1A	62HS112	1.110	1.53	.51	.090	.090
	15.5-17.5	1B[8]	62HS142	1.110	1.80B 1.50B'	1.31C .48C'	.090	.090
	15.5-17.5	1B[9]	62HS84	1.110	1.80B 1.50B'	1.31C .48C'	.090	.090
	15.5-17.5	1A	62HSA52	1.312	1.53	.50	.090	.040
	15.5-17.5	1B[7,11]	62HSA14	1.360[10]	1.75B 1.53B'	1.31C .50C'	.090	.040
	15.5-17.5	1B[5]	62HSA44	1.360	1.75B 1.53B'	1.31C .50C'	.090	.040
	15.5-17.5	1A	62HSA42	1.110	1.45	.47	.040	.040
	15.5-18.0▲							
WR62 90°	15.5-17.0	2A	62HSA92	.750 (R)	1.61	.58	.040	.090
WR62.138 HGT	12.6-14.2	1A	B62HS12	1.110	1.43	.28	.040	.040
	12.6-14.2	1D	B62HS22	1.110	1.36	.22	.040	.040
WR75	10.1-11.6	1A	75HS32	1.375	1.75	.58	.050	.050
	10.5-12.0	1A	75HS12	1.375	1.75	.58	.050	.050
	11.6-13.4	1A	75HS22	1.500	1.75	.58	.050	.050
	11.7-14.3*+	1A	75HS42	1.500	1.75	.58	.050	.050
	13.0-15.0	1A	75HS52	1.375	1.75	.58	.050	.050
WR75 .200 HGT	10.0-10.5	1A	A75HS12	1.375	1.75	.40	.050	.050
WR90	8.10-9.30	1A	90HS342	1.735	2.13	.61	.120	.120
	8.10-9.30	1B[3]	90HS94	1.735	2.58B 2.13B'	1.62C .61C'	.120	.120

Except as Noted Output power Unbalance (dBmax.) ±0.25 Isolation (db min.) 30

Notes: * *Isolation 28 dB min.* + *Unbalance ±.50 dB.*

5 *Dual sidewall flat flange four 0.144 dia. holes 62FS52*

6 *Dual S/W blank flange (no holes)*

7 *Dual choke pressure flange 62FS12 four 0.144 dia. holes*

8 *Dual S/W flat flange four 0.144 dia. holes 62FS92*

9 *Dual S/W pressure flange six 0.144 dia. holes*

NOTE: All hybrids corrals mate with standard W/G (WR size noted in the table on Page 51) having a common wall of the thickness shown by dimensions D and E.

Socket dimensions & overall tolerances shown on Page 44.

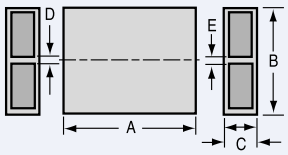

STYLE 1D

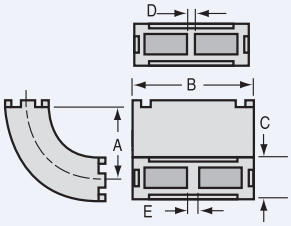

STYLE 2A

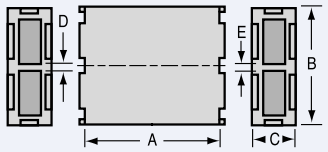

STYLE 1A

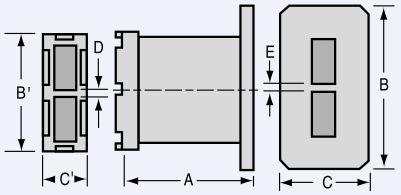

STYLE 1B

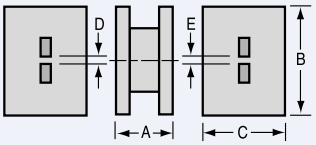

STYLE 1C

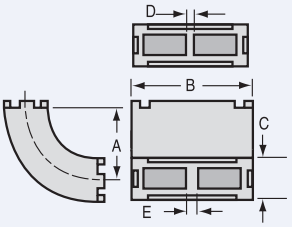

STYLE 2A

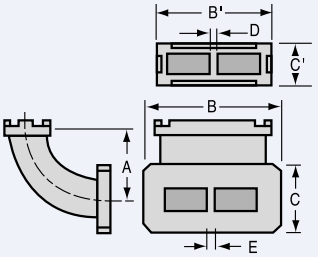

STYLE 2B

Sidewall Couplers – 3dB

W/G Size	Frequency GHz	Style	Model Number	Dimensions (inches) A	B	C	D	E
WR90 (cont.)	8.5-9.7	1B[3]	90HS84	1.735	2.58B 2.13B'	1.62C .61C'	.120	.120
	8.5-9.6	1A[1]	90HS52	1.235	2.00	.56	.050	.050
	8.4-9.6	1A	90HS272	1.735	2.06	.59	.050	.050
	8.5-9.7	1A	90HSA232	1.735	2.13	.61	.120	.120
	8.5-9.6	1A	90HS322	1.735	2.12B 2.05B'	.60	.050	.120
	8.5-9.7	1B[4B]	90HS54	1.875	2.58B 2.14B'	1.63C .61C'	.120	.050
	8.5-9.7	1B[4A]	90HS24	1.875	2.58B 2.14B'	1.63C .61C'	.120	.050
	8.6-10.0	1A	90HS92	2.000	2.14	.61	.120	.120
	8.8-10.0	1A	90HSA242	1.485	2.06	.60	.050	.050
	9.10-10.20	1A	90HS152	1.735	2.13	.61	.120	.120
	9.10-10.20	1B[3]	90HS74	1.735	2.58B 2.13B'	1.62C .61C'	.120	.120
	9.0-10.0	1A	90HS112	1.875	2.14	.61	.050	.120
	9.0-10.0	1B[4A]	90HS144	1.875	2.58B 2.14B'	1.63C .61C'	.120	.050
	9.4-10.8	1A	90HS82	2.000	2.13	.61	.120	.120
	9.6-10.25	1A	90HSA252	1.485	2.03	.59	.050	.050
	10.5-11.9	1A	90HS42	1.735	2.13	.61	.120	.120
	10.5-11.9	1C[2]	90HS44	1.735	2.80	1.27	.120	.120
WR90 60°	8.4-9.7	4B[2]	90HS114	1.680(R)	2.84B 2.03B'	1.38C .58C'	.050	.050
WR90 90°	8.5-9.6	2A	90HS12	1.125(R)	2.04	.60	.050	.050
	8.5-9.6	2A	90HS292	1.125(R)	2.12	.61	.120	.120
	8.8-10.0	2A	90HS332	1.125(R)	2.10	.60	.050	.050
	9.6-10.7	2A	90HS22	1.125(R)	2.13	.61	.120	.120
	9.6-10.7	2B[3]	90HS64	1.125(R)	2.54B 2.12B'	1.62C .61C'	.120	.120
WR90 180°	8.5-9.6	3A	90HS102	1.100(D)	2.15	.70	.050	.050
	8.4-9.6●	3A	90HS142	1.095(D)	2.22	.70	.120	.120
WR90 Tapered to WR112	8.5-9.6	5A	90HS62	2.187	2.11B 2.62B'	.60C .72C'	.120	.120
WR90 Tapered to WR112 90°	8.5-9.6●	6A	90HS132	1.312(R)	2.13B 2.60B'	.62C .71C'	.120	.150
WR90 .200 HGT	8.2-9.3	1A	A90HS12	1.735	2.12	.40	.120	.120
	8.5-9.6	1A	A90HS22	1.735	2.12	.40	.120	.120
	9.4-10.8	1A	A90HS32	1.735	2.12	.40	.120	.120
WR90 Tapered to .300 HGT	8.5-9.6	1A	B90HS22	1.735	2.14B 2.14B'	.63C .53C'	.120	.120

Except as Noted Output power Unbalance (dBmax.) ±.25 Isolation (db min.) 30

Notes: ● *Isolation 27 dB min.*

1 *No physical center wall .050 commonwall required by both mating components to function electrically*

2 *Flange blank*

3 *Dual S/W flat flanges six .169 dia. holes 90FS112*

4A *Dual S/W pressure flange 90FS152 six .169 dia.*

4B *Dual S/W pressure flange 90FS162 six 8/32 threaded*

NOTE: All hybrids corrals mate with standard W/G (WR size noted in the table on Page 51) having a common wall of the thickness shown by dimensions D and E.

Socket dimensions & overall tolerances shown on Page 44.

Sidewall Couplers – 3dB

W/G Size	Frequency GHz	Style	Model Number	Dimensions (inches) A	B	C	D	E
WR90 Tapered to .300 HGT 90°	8.5-9.6	6A	B90HS12	1.125(R)	2.10B 2.10B'	.50C .60C'	.120	.120
	9.5-10.5	6A	B90HS42	1.124(R)	2.10B 2.10B'	.50C .60C'	.120	.120
WR90 .150 HGT	8.5-9.6	1A	C90HS12	1.580	2.07	.35	.070	.070
WR102	9.4-10.6	1A	102HS12	2.250	2.450	.77	.150	.150
	9.4-10.6	1B	102HS22	2.250	3.48B 2.45B'	1.78C .77C'	.150	.150
WR112	6.9-8.0	1A	112HS12	2.187	2.64	.73	.150	.150
	7.1-8.5**	1A	112HS32	2.187	2.64	.73	.150	.150
	7.1-8.5**	1B[7]	112HS44	2.187	3.218 2.64	1.375 .73	.150	.150
	7.5-8.5	1A	112HS62	2.187	2.64	.73	.150	.150
	7.9-9.0	1A	112HS142	2.187	2.64	.74	.150	.150
	8.4-9.6	1B	112HS34	2.000	3.21B 2.52B'	1.37C .72C'	.064	.064
	8.4-9.8	1A	112HS72	2.000	2.53	.73	.064	.064
	8.5-9.7	1A	112HS112	2.187	2.61B 2.53B'	.72	.064	.150
	8.5-9.6	1B[5]	112HS14	2.437	3.06B 2.53B'	1.87C .73C'	.064	.064
	8.5-9.7	1B[6]	112HS24	2.187	3.22B 2.61B'	1.38C .72C'	.150	.064
	8.8-10.25	1A	112HS92	2.000	2.53	.73	.064	.064
WR112	8.5-9.6	2A	112HS122	1.312(R)	2.64	.83	.064	.064
90°	8.5-9.6	2A	112HS102	1.312(R)	2.66	.77	.064	.150
WR112 180°	8.5-9.6	3A	112HS22	1.375(D)	2.62	.72	.150	.150
WR137	5.4-6.0	1A*	137HS12	2.750	3.15	.88	.150	.150
	5.4-6.0	1B[1]	137HS14	2.750	3.80B 3.14B'	1.61C .88C'	.150	.150
	5.8-6.5	1A	137HS72	2.625	3.11	.83	.150	.150
	6.0-7.0	1A	137HS52	2.625	3.09	.83	.150	.150
	6.85-7.80	1A	137HS32	2.625	3.13	.88	.150	.150
	7.15-8.20	1A	137HS22	2.625	3.13	.88	.150	.150
WR137 .247 HGT	5.4-6.0	1A	A137HS12	2.625	3.13	.48	.150	.150
WR137 .487 HGT	6.0-7.0	1B[2]	B137HS14	2.625	3.80B 3.09B'	1.40C 0.69C'	.150	.150
WR159	5.4-5.9	1A	159HS22	3.250	3.56	1.02	.150	.150
	5.9-6.5	1A	159HS12	3.250	3.56	1.02	.150	.150
	5.925-6.425■	1A	159HSA12	3.250	3.56	1.02	.150	.150
	5.9-6.5	1B[3]	159HS14	3.250	4.20B 3.56B'	1.67C 1.02C'	.150	.150
	5.9-6.5	1C[3]	159HS24	3.250	4.20	1.67	.150	.150

Except as Noted Output power Unbalance (dBmax.) ±.25 Isolation (db min.) 30

Notes: * *Corrals same as Style 1B* ** *Isolation 28 unbalance, .35 dB min.*

■ *Unbalance ±.15 dB max. Isolation 35 dB min.*

1 *Dual S/W flat flange 137FS32*

2 *Dual S/W flat flange B 137FS12*

5 *Dual S/W pressurized choke flange six 0.169 dia. holes 112FS22*

6 *Dual S/W pressure flat flange ten 0.167 dia. holes 112FS102*

7 *Dual S/W flat flange ten 0.169 dia. holes 112FS82*

NOTE: All hybrids corrals mate with standard W/G (WR size noted in the table on Page 51) having a common wall of the thickness shown by dimensions D and E.

Socket dimensions & overall tolerances shown on Page 44.

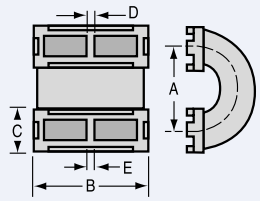

STYLE 3A

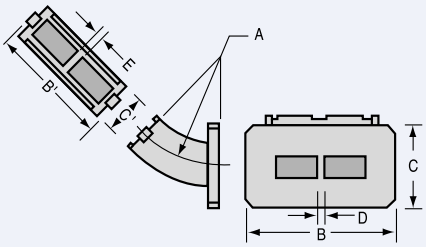

STYLE 4B

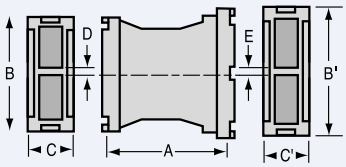

STYLE 5A

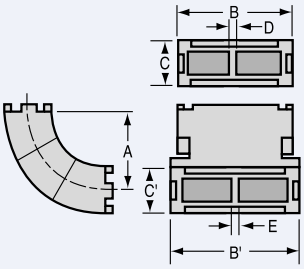

STYLE 6A

Sidewall Couplers – 3dB

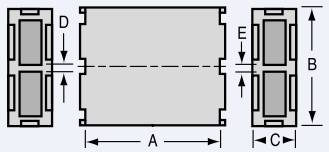

STYLE 1A

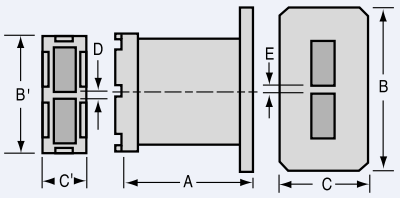

STYLE 1B

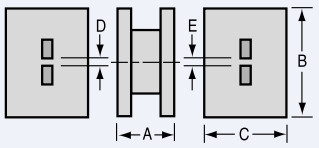

STYLE 1C

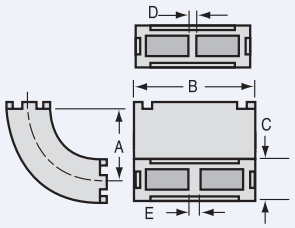

STYLE 2A

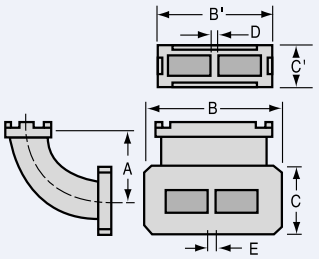

STYLE 2B

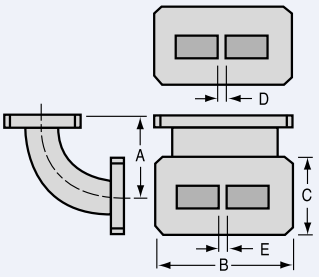

STYLE 2C

W/G Size	Frequency GHz	Style	Model Number	Dimensions (inches) A	B	C	D	E
WR187	3.95-4.50	1A	187HSA92	3.625	4.17	1.17	.150	.150
	3.95-4.50	1B[4]	187HSA84	3.625	4.76B 4.17B'	1.77C 1.17C'	.150	.150
	3.95-4.50	1C[4]	187HS74	3.625	4.76	1.77	.150	.150
	4.34-5.06	1A	187HSA32	3.625	4.17	1.17	.150	.150
	4.34-5.06	1C[4]	187HS44	3.625	4.76	1.77	.150	.150
	4.34-5.06	1B[4]	187HS94	3.625	4.76B 4.17B'	1.77C 1.17C'	.150	.150
	4.50-5.20	1A	187HSA52	3.625	4.17	1.17	.150	.150
	4.50-5.20	1B[4]	187HSA64	3.625	4.76B 4.17B'	1.77C 1.17C'	.150	.150
	4.50-5.20	1C[4]	187HS54	3.625	4.76	1.77	.150	.150
	4.70-5.25	1A	187HS62	3.625	4.14	1.13	.128	.128
	4.90-5.75	1A	187HS72	3.625	4.14	1.13	.150	.150
	5.2-5.9	1A	187HSA42	3.250	4.14	1.14	.128	.128
	5.2-5.9	1B[5A]	187HSA24	3.250	5.02B 4.14B'	2.01C 1.14C'	.128	.128
	5.2-5.9	1B[5B]	187HSA14	3.250	5.02B 4.14B'	2.01C 1.14C'	.128	.128
WR187 90°	3.8-4.3	2C[3]	187HS13	2.250(R)	4.75	1.78	.150	.150
	3.8-4.3	2A	187HS112	2.250(R)	4.15	1.13	.150	.150
	4.4-5.0	2A	187HS22	2.375(R)	4.14	1.12	.150	.150
	5.2-5.9	2A	187HS82	2.250(R)	4.19	1.20	.128	.128
	5.2-5.9	2B[5A]	187HS34	2.250(R)	5.02B 4.19B'	2.01C 1.20C'	.128	.128
WR229	3.7-4.2	1A	229HS12	5.25	4.96	1.40	.128	.128
WR284	2.66-2.99	1A	284HS32	5.50	6.11	1.59	.160	.160
	2.7-2.9	1A	284HS22	5.50	6.14	1.62	.160	.160
	2.7-2.9	1C[6]	284HS14	5.50	7.22	2.72	.160	.160
	2.7-2.9	1A	284HS92	5.50	6.18	1.67	.160	.160
	2.8-3.2	1A	284HS12	5.50	6.14	1.62	.160	.160
	2.99-3.44	1A	284HS52	5.50	6.14	1.62	.160	.160
	3.1-3.5	1A	284HS102	5.50	6.18	1.67	.160	.160
	3.44-3.95	1A	284HS42	5.50	6.11	1.62	.160	.160
	3.1-3.5	1A[8]	A284HS22	5.50	6.16	.72	.160	.160
	3.1-3.5	1A[7]	A284HS32	5.50	6.16	.99	.160	.160
WR284 90°	2.85-3.15	1A	284HS62	3.50(R)	6.20	1.60	.160	.160

Except as Noted Output power Unbalance (dBmax.) ±.25 Isolation (db min.) 30

Notes: [3] *Blank flange*

[4] *Dual s/w flat flange 187FS92*

[5A] *Dual sidewall flat pressure flange twelve 0.196 dia. holes (187FS52)*

[5B] *Dual sidewall flat pressure flange twelve 10.32 threaded holes (187FS62)*

[6] *Dual S/W flat flange 284FS12*

[7] *.670 height*

[8] *.400 height*

NOTE: All hybrids corrals mate with standard W/G (WR size noted in the table on Page 51) having a common wall of the thickness shown by dimensions D and E.
Socket dimensions & overall tolerances shown on Page 44.

Sidewall Couplers – Other than 3dB

W/G Size	Electrical Data: Frequency GHz	Style	Model Number	Coupling Reference (dB)	Output Power Unbalance (dB)	Directivity (dB min)	Mechanical Data (inches): A	B	C	D	E
WR28	38.0-40.2	1A	28CH12	4.8	-3.0 ±.25	20	.550	.77	.30	.040	.040
WR42	19.5-22.5	1A	42CH12	4.8	-3.0 ±.25	18	.900	1.11	.29	.090	.090
WR62	12.0-14.0	1A	62CH12	4.8	-3.0 ±.25	15	1.110	1.44	.47	.040	.040
	12.6-14.0	1A	62CH102	4.8	-3.0 ±.25	20	1.110	1.44	.47	.040	.040
	12.6-14.4	1A	62CH32	5.6	-4.2 ±.25	20	1.110	1.45	.46	.040	.040
	12.6-14.6	1A	62CH42	5.4	-3.95 ±.25	20	1.110	1.45	.46	.040	.040
	13.0-14.5	1A	62CH52	6.0	-4.8 ±.25	20	1.110	1.45	.46	.040	.040
	13.1-14.3	1A	62CH72	6.2	-5.0 ±.25	20	1.110	1.45	.46	.040	.040
	13.5-15.5	1A	62CH62	4.8	-3.0 ±.25	18	1.250	1.50	.48	.090	.090
	15.0-17.0	1A	62CH22	4.8	-3.0 ±.25	20	1.110	1.44	.47	.040	.040
	15.4-17.4	1B[1]	62CH92	4.8	-3.0 ±.25	22	1.110	1.75B 1.45B'	1.30C .48C'	.040	.040
WR75	10.7-11.7	1A	75CH12	6.0	-4.8 ±.25	24	1.375	1.75	.58	.050	.050
WR90	8.2-9.2	1A	90CH52	7.0	-6.1 ±.25	20	1.735	2.14	.69	.120	.120
	8.5-9.6	1A	90CH12	4.8	-3.0 ±.25	22	1.375	2.13	.63	.120	.120
	8.5-9.6	1A	90CH62	3.5	-1.0 ±.25	25	1.735	2.06	.59	.050	.050
	8.7-9.6	1A	90CH72	5.8	-4.5 ±.25	15	1.735	2.06	.59	.050	.050
	8.8-9.6	1A	90CH82	2.5	+1.0 ±.25	25	1.735	2.06	.66	.050	.050
	8.8-9.8	1A	90CH92	5.5	-4.0 ±.25	15	1.735	2.06	.59	.050	.050
	9.1-9.6	1A	90CH102	6.0	-4.9 ±.25	22	1.735	2.06	.59	.050	.050
	9.1-9.65	1A	90CH112	4.0	-1.8 ±.25	20	1.735	2.06	.59	.050	.050
	9.3-11.0	1A	90CH122	5.2	-3.7 ±.25	15	2.000	2.13	.61	.120	.120
	9.5-10.3	1A	90CH132	5.2	-3.7 ±.25	20	2.000	2.13	.61	.120	.120
	9.5-11.0	1A	90CH32	4.8	-3.0 ±.25	20	2.000	2.13	.61	.120	.120
	9.7-10.0	1A	90CH142	5.5	-4.0 ±.25	18	1.735	2.06	.59	.050	.050
WR90	8.5-9.6	1A	A90CH12	-3.2	-.40 ±.40	25	1.735	2.12	.40	.120	.120
200 HGT	8.5-9.6	1A	A90CH22	-3.5	-1.00 ±.25	25	1.735	2.12	.40	.120	.120
	8.5-9.6	1A	A90CH32	-3.75	-1.40 ±.25	23	1.735	2.12	.40	.120	.120
	8.5-9.6	1A	A90CH42	-4.0	-1.80 ±.25	20	1.735	2.12	.40	.120	.120
	8.5-9.6	1A	A90CH52	-4.8	-3.00 ±.25	20	1.735	2.12	.40	.120	.120
	8.5-9.6	1A	A90CH62	-5.4	-3.90 ±.25	15	1.735	2.12	.40	.120	.120
	9.3-10.3	1A	A90CH72	-5.2	-3.64 ±.25	24	1.735	2.12	.42	.120	.120
	9.3-10.3	1A	A90CH82	6.96	-5.98 ±.25	20	1.735	2.12	.47	.120	.120
	9.3-10.3	1A	A90CH92	7.65	-6.83 ±.25	14	1.735	2.12	.49	.120	.120
WR112	7.25-7.75	1A	112CH32	4.8	-3.0 ±.25	20	2.187	2.64	.73	.150	.150
	7.25-8.75	1A	112CH12	4.8	-3.0 ±.25	20	2.187	2.64	.73	.150	.150
	8.5-9.6	1A	112CH22	4.8	-3.0 ±.25	20	2.000	2.53	.73	.064	.064
WR137	5.3-6.3	1A	137CH12	4.8	-3.0 ±.30	20	2.750	3.15	.88	.150	.150
	5.5-6.2	1A	137CH22	5.0	-3.3 ±.30	22	2.750	3.15	.88	.150	.150

Notes: [1] *Similar to 430FA12 flanges*

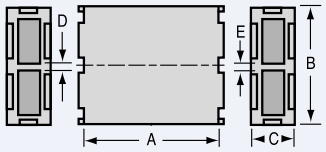

STYLE 1A

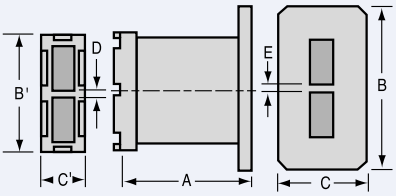

STYLE 1B

Topwall Couplers – 3dB

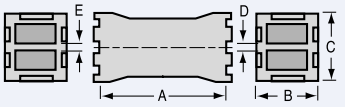

STYLE 7A

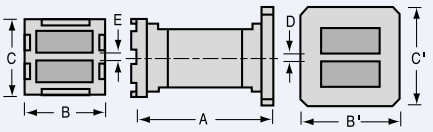

STYLE 7B

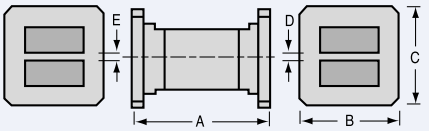

STYLE 7C

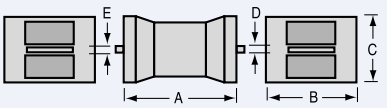

STYLE 7E

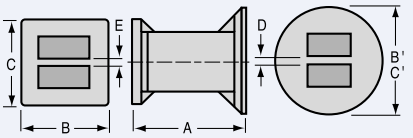

STYLE 7F

W/G Size	Electrical Data: Frequency GHz	Style	Model Number	Output Power Unbalance (dB)	Isolation (dB min)	Mechanical Data (inches): A	B	C	D	E
WR51	15.0-17.5	7A	51HT22	±.25	30	.975	.66	.70	.040	.040
	17.1-20.0	7A	51HT12	±.25	30	1.125	.67	.72	.040	.040
WR62	13.3-15.6	7A	62HT82	±.25	30	1.250	.78	.88	.090	.090
	15.0-17.0	7A	62HT22	±.25	30	1.110	.78	.88	.090	.090
	15.0-17.5	7A	62HT72	±.25	30	1.110	.78	.88	.090	.090
	15.5-17.5	7A	62HT52	±.25	30	1.110	.78	.88	.090	.090
	16.0-17.0	7A	62HT32	±.25	35	1.110	.78	.88	.090	.090
WR90	8.5-9.6	7A	90HT22	±.25	30	1.735	1.13	1.14	.120	.120
	9.0-9.2	7A	90HT112	±.40	25	1.735	1.14	1.16	.120	.120
	9.2-11.0	7A	90HT112	±.40	28	1.735	1.14	1.16	.120	.120
	9.4-10.8	7A	90HT92	±.25	30	1.735	1.14	1.16	.120	.120
WR112	7.5-7.7	7A	112HT12	±.45	25	2.000	1.34	1.38	.150	.150
	7.7-9.6	7A	112HT12	±.45	28	2.000	1.34	1.38	.150	.150
	7.9-9.3	7A	112HT22	±.25	30	2.000	1.34	1.38	.150	.150
WR137	5.2-6.0	7A	137HT82	±.25	30	2.625	1.63	1.64	.150	.150
	5.2-6.7	7E	137HT42	±.60	28	2.750	2.13	1.53	.150	.150
	5.4-5.9	7A	137HT72	±.15	35	2.625	1.63	1.64	.150	.150
	6.7-8.2	7E	137HT52	±.45	26	2.750	2.13	1.53	.150	.150
WR187	4.0-5.2	7E	187HT32	±.60	28	3.750	2.59	2.09	.150	.150
	4.3-5.0	7A	187HT62	±.25	30	3.535	2.61	2.12	.150	.150
	5.0-5.6	7A	187HT22	±.25	30	3.625	2.14	2.16	.150	.150
	5.1-5.9	7A	187HT42	±.25	30	3.625	2.13	2.14	.150	.150
WR229	3.7-4.2	7A	229HT12	±.25	30	4.250	2.57	2.69	.128	.128
WR284	2.5-3.0	7F	284HT64	±.25	30	4.660	4.09B 5.00B'	4.09C 5.00C'	.160	.160
	2.7-2.9	7A	284HT12	±.25	30	4.750	3.19	3.19	.160	.160
	2.7-2.9	7B[1]	284HT34	±.25	30	4.750	3.19B 4.70B'	3.19C 4.70C'	.160	.160
	2.7-2.9	7C[1]	284HT44	±.25	30	4.750	4.70	4.70	.160	.160
	2.75-3.25	7A	284HT22	±.25	30	4.750	3.19	3.19	.160	.160
	2.7-3.3	7A	284HT22	±.35	28	4.750	3.19	3.19	.160	.160
	2.7-3.25	7B[1]	284HT14	±.25	30	4.750	3.19B	3.19C	.160	.160
	2.7-3.3	7B[1]	284HT14	±.35	28	4.750	4.70B'	4.70C'	.160	.160
	2.75-3.25	7C[1]	284HT24	±.25	30	4.750	4.70	4.70	.160	.160
	2.7-3.3	7C[1]	284HT24	±.35	28	4.750	4.70	4.70	.160	.160
	2.7-3.7	7B[1]	284HT54	±1.0	20	5.500	3.19B 4.70B'	3.19C 4.70C'	.160	.160
	3.0-3.5	7A	284HT42	±.25	30	4.750	3.19	3.19	.160	.160

Notes: [1] *284FT12 flange*

Socket dimensions & overall tolerances shown on Page 44.

Topwall Couplers – Other than 3dB

W/G Size	Electrical Data						Mechanical Data (inches)				
	Frequency GHz	Style	Model Number	Coupling Reference (dB)	Output Power Unbalance (dB)	Directivity (dB min)	A	B	C	D	E
WR51	16.0-17.0	7A	51CE12	4.1	-2.0 ±.25	20	.97	.66	.70	.04	.04
	16.0-17.0	7D	51CE22	3.8	-1.5 ±.10	20	1.00	.59	.63	.04	.04
	16.0-17.0	7D	51CE32	5.3	-3.8 ±.10	19	1.00	.59	.63	.04	.04
	16.0-17.0	7D	51CE42	6.5	-5.5 ±.10	18	1.00	.59	.63	.04	.04
WR62	13.0-14.7	7A	62CE32	6.0	-4.8 ±.25	15	1.25	.78	.88	.09	.09
	13.2-14.7	7A	62CE42	10.0	-9.5 ±.20	12	1.25	.78	.88	.09	.09
	15.5-18.0	7A	62CE52	7.0	-6.0 ±.15	16	1.11	.78	.88	.09	.09
	16.0-17.0	7A	62CE62	7.0	-6.0 ±.10	24	1.11	.78	.88	.09	.09
	16.0-18.5	7A	62CE72	4.8	-3.0 ±.25	20	1.11	.78	.88	.09	.09
WR90	8.5-9.6	7A	90CE12	4.8	-3.0 ±.25	22	1.73	1.14	1.09	.05	.05
	8.5-9.8	7A	90CE22	6.0	-4.8 ±.25	18	1.73	1.14	1.09	.05	.05
	9.0-10.0	7D	90CE42	7.0	-6.0 ±.25	20	1.78	1.00	1.02	.12	.12
	9.09-9.66	7D	90CE52	5.3	-3.8 ±.30	20	1.83	1.00	.95	.05	.05
	9.09-9.66	7D	90CE62	3.8	-1.5 ±.25	27	2.07	1.00	.95	.05	.05
	9.09-9.66	7D	90CE72	6.5	-5.5 ±.25	20	2.60	1.00	.95	.05	.05

Notes: *Socket dimensions & overall tolerances shown on Page 44.*

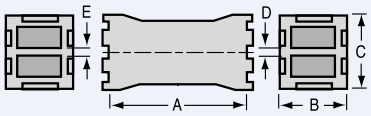

STYLE 7A

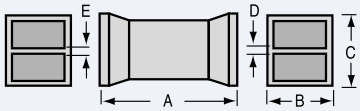

STYLE 7D

Socket Dimensions & Tolerances

CORRALS

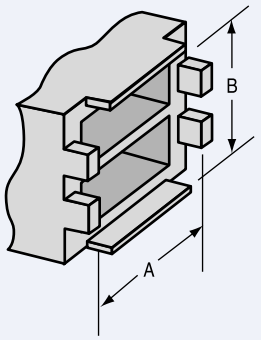

CORRALS

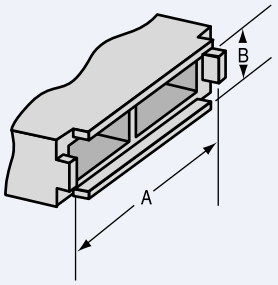

WR	ID	Common Wall Ref.	A	Tolerance -.000	B	Tolerance B
Topwall						
51	.510-.255	.040	.592	+.003	.632	+.003
62	.622-.311	.040	.704	+.003	.744	+.003
		.090	.704	+.003	.794	+.003
90	.900-.400	.050	1.002	+.003	.952	+.003
		.120	1.002	+.003	1.022	+.003
112	1.122-.497	.150	1.252	+.003	1.274	+.003
137	1.372-.622	.074	1.503	+.004	1.449	+.004
		.150	1.503	+.004	1.525	+.004
187	1.872-.872	.150	2.004	+.005	2.026	+.005
229	2.290-1.145	.128	2.453	+.005	2.551	+.005
284	2.840-1.340	.160	3.005	+.005	3.005	+.005
Sidewall						
15	.148-.074	.040	.417	+.004	.155	+.002
28	.280-.140	.040	.681	+.004	.221	+.002
42	.420-.170	.040	.961	+.006	.251	+.003
		.090	1.011	+.006	.251	+.003
51	.510-.255	.040	1.142	+.006	.337	+.003
		.090	1.192	+.006	.337	+.003
62	.622-.311	.040	1.366	+.006	.393	+.003
		.090	1.416	+.006	.393	+.003
MDL-B62	.622-.138	.040	1.366	+.006	.218	+.003
75	.750-.375	.050	1.652	+.006	.477	+.003
MDL-A75	.750-.200	.050	1.652	+.006	.302	+.003
90	.900-.400	.050	1.952	+.006	.502	+.003
		.120	2.022	+.006	.502	+.003
MDL-A90	.900-.200	.120	2.022	+.006	.302	+.003
MDL-B90	.900-.300	.120	2.022	+.006	.402	+.003
MDL-C90	.900-.150	.070	1.938	+.006	.213	+.003
WR102	1.020-.510	.150	2.318	+.006	.638	+.003
112	1.122-.497	.064	2.438	+.006	.627	+.003
		.150	2.524	+.006	.627	+.003
137	1.372-.622	.074	2.949	+.008	.753	+.004
		.150	3.025	+.008	.753	+.004
MDL-A137	1.372-.247	.150	3.025	+.008	.379	+.004
MDL-B137	1.372-.487	.150	3.025	+.008	.618	+.004
159	1.590-.795	.150	3.461	+.008	.926	+.004
187	1.872-.872	.128	4.005	+.010	1.005	+.005
		.150	4.026	+.010	1.005	+.005
MDL-A187	1.872-.370	.150	4.027	+.010	.503	+.005
229	2.290-1.145	.128	4.841	+.010	1.278	+.005
284	2.840-1.340	.160	6.005	+.010	1.505	+.005
MDL-A284	2.840-.400	.160	6.045	+.010	.605	+.005

Tolerances

Tolerances on "A" Dimension (Length)
WR10 to WR51 = ±.005
WR62 to WR112 = ±.010
WR137 to WR187 = ±.015
WR229 to WR284 = ±.020

See MDL Flange Catalog for flange dimensions and tolerances
All dimensions and specifications are subject to change without notice: Contact MDL for specific dimensions and tolerances.
All other dimensions unless otherwise specified reference only.

Section 17

Flanges & Waveguide

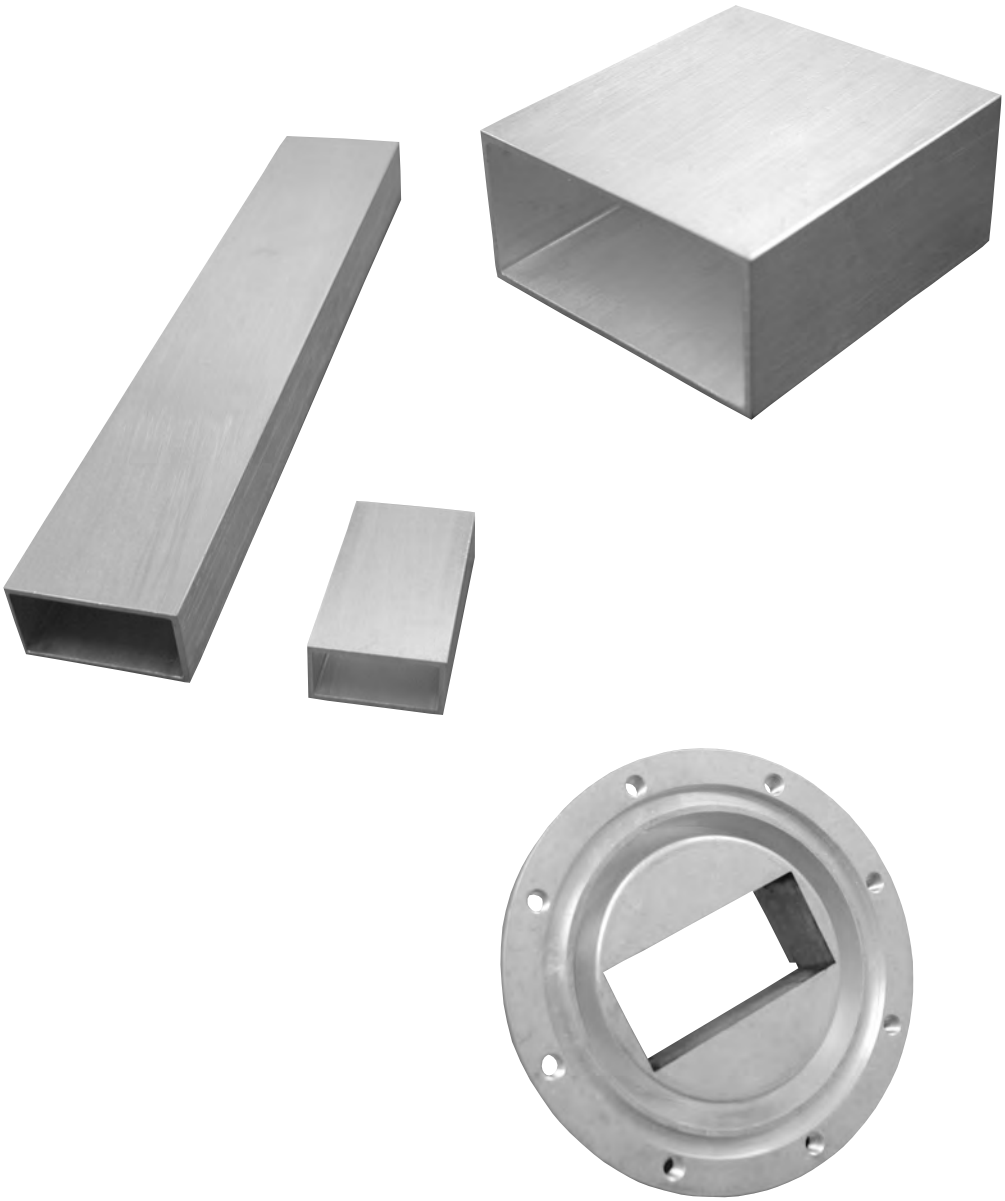

Introduction

MDL has a complete line of precision waveguide and flanges. Our waveguide meets the requirements of MIL-W-85. Where complex waveguide network design require small, ultra precise tubing, MDL provides tolerances down to ±0.0005”. Special parameters and inside finishes down to 10 micro-inches are available.

All MDL flanges meet the requirements of MIL-F-3922 and AN U/G specifications. Dual flanges are available both in aluminum and copper alloys. The dual flange employ a sleeve type mounting in which the waveguide feeds through the flange making up a common wall. MDL can supply many other special configurations, hole sizes and patterns to meet specific customer requirements.

Flanges

Waveguide Size		Flange Type	Aluminum			Brass			Mounting Holes (REF)	Gasket Model No.
EIA (ID)	RG (REF)*		Model No.	MIL F-3922	AN No. U/G	Model No.	MIL F-3922	AN No. U/G		
Single Flanges										
WR12	99/U (S)	COVER SLEEVE	-	-	-	F12BST	67-003	387/U	(4)NO.4-40	-
.112x.061	274/U (B)	CONTACT SLEEVE	-	-	-	K12BSC	66-001	1522/U	(4).104 DIA	-
WR15	98/U (S)	COVER SLEEVE	-	-	-	F15BST	67-002	385/U	(4)NO.4-40	-
.148x.074	273/U (B)	CONTACT SLEEVE	-	-	-	K15BSC	66-002	1523/U	(4).104 DIA	-
WR22	97/U (S)	COVER SLEEVE	-	-	-	F22BST	67-001	383/U	(4)NO.4-40	-
.224x.112	272/U (B)	CONTACT SLEEVE	-	-	-	K22BST	65-001	1521/U	(4)NO.4-40	-
WR28	96/U (S)	COVER SLEEVE	F28ASC	-	-	F28BSC	54-003	599/U	(4).116 DIA	-
.280x.140	271/U (B)	COVER BUTT	F28ABC	-	-	F28BBC	58-001	-	(4).116 DIA	-
		CHOKE BUTT	C28ABT	-	-	C28BBT	59-005	600A/U	(4)NO. 4-40	28GA12
WR42	53/U (B)	COVER SLEEVE	F42ASC	54-002	597/U	F42BSC	54-001	595/U	(4).116 DIA	-
.420x.170	121/U (A)	COVER BUTT	F42ABC	-	-	F42BBC	-	-	(4).116 DIA	-
	66/U (S)	CHOKE BUTT	C42ABT	59-004	598 A/U	C42BBT	59-003	596 A/U	(4)NO. 4-40	42GA32
WR51	351/U (A)	COVER SLEEVE	F51ASC	-	-	F51BSC	-	-	(4).144 DIA	-
.510x.255	352/U (B)	COVER BUTT	F51ABC	70-023	-	F51BBC	70-022	-	(4).144 DIA	-
	353/U (B)	CHOKE BUTT	C51ABT	69-005	-	C51BBT	69-004	-	(4)NO.6-32	51GA12
WR62	349/U (A)	COVER SLEEVE	F62ASC	53-006	1665/U	F62BSC	53-005	419/U	(4).144 DIA	-
.622x.311	91/U (B)	COVER BUTT	F62ABC	70-020	-	F62BBC	70-019	-	(4).144 DIA	-
	107/U (S)	CHOKE BUTT	C62ABT	59-002	1666/U	C62BBT	59-001	541A/U	(4)NO.6-32	62GA22
WR75	346/U (B)	COVER SLEEVE	F75ASC	53-008	-	F75BSC	53-007	-	(4).144 DIA	-
.750x.375	347/U (A)	COVER BUTT	F75ABC	70-017	-	F75BBC	70-016	-	(4).144 DIA	-
		CHOKE BUTT	C75ABT	59-011	-	C75BBT	59-010	-	(4)NO.6-32	75GA12
WR90	52/U (B)	COVER SLEEVE	F90ASC	53-003	135/U	F90BSC	53-001	39/U	(4).169 DIA	-
.900x.400	67/U (A)	COVER BUTT	F90ABC	54-014	-	F90BBC	54-013	-	(4).169 DIA	-
		CHOKE BUTT	C90ABT	59-008	136B/U	C90BBT	59-006	40B/U	(4)NO.8-32	90GA22
WR102	320/U (B)	COVER SLEEVE	F102ASC	-	-	F102BSC	-	-	(4).169 DIA	-
1.020x.510		COVER BUTT	F102ABC	70-014	-	F102BBC	70-013	1493/U	(4).169 DIA	-
		CHOKE BUTT	C102ABT	69-002	-	C102BBT	69-001	1494/U	(4)NO.8-32	102GA12
WR112	51/U (B)	COVER SLEEVE	F112ASC	53-004	138/U	F112BSC	53-002	51/U	(4).169 DIA	-
1.122x.497	68/U (A)	COVER BUTT	F112ABC	54-012	-	F112BBC	54-011	-	(4).169 DIA	-
		CHOKE BUTT	C112ABT	59-009	137B/U	C112BBT	59-007	52B/U	(4)NO.8-32	112GA32
WR137†	50/U (B)	COVER SLEEVE	F137ASC	55-002	441/U	F137BSC	55-001	344/U	(6).199 DIA	-
1.372x.622	106/U (A)	COVER BUTT	F137ABC	-	-	F137BBC	-	-	(6).199 DIA	-
		CHOKE BUTT	C137ABT	60-002	440B/U	C137BBT	60-001	343B/U	(6)NO.10-32	137GA12
WR187†	49/U (B)	COVER SLEEVE	F187ASC	57-001	407/U	F187BSC	57-002	149A/U	(8).199 DIA	-
1.872x.872	95/U (A)	COVER BUTT	F187ABC	-	-	F187BBC	-	-	(8).199 DIA	-
		CHOKE BUTT	C187ABT	62-001	406B/U	C187BBT	62-002	148C/U	(8)NO. 10-32	187GA12
WR284†	48/U (B)	COVER SLEEVE	F284ASC	56-002	584/U	F284BSC	56-001	53/U	(8).257 DIA	-
2.840x1.340	75/U (A)	COVER BUTT	F284ABC	-	-	F284BBC	-	-	(8).257 DIA	-
		CHOKE BUTT	C284ABT	61-001	585A/U	C284BBT	61-002	54B/U	(8)NO.1/4-20	284GA12

Notes: **Waveguide Material: (B)-Brass (A)-Aluminum (S)-Silver*
†Flanges are circular and not rectangular as pictured below.

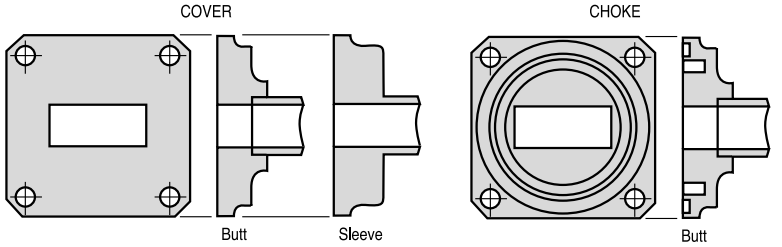

Flanges

Waveguide Size EIA (ID)	Waveguide Size RG (REF)*	Flange Type	Aluminum Model No.	Aluminum MIL F-3922	Aluminum AN No. U/G	Brass Model No.	Brass MIL F-3922	Brass AN No. U/G	Mounting Holes (REF)	Gasket Model No.
CPR Flanges										
WR90	52/U (B)	FLAT BUTT	CPR90AFC	52-022	1737/U	CPR90BFC	52-021	1736/U	(8).169 DIA	-
.900x.400	67/U (A)	GROOVED BUTT	CPR90AGC	52-044	1361/U	CPR90BGC	52-043	1360/U		90GA52
WR112	51/U (B)	FLAT BUTT	CPR112AFC	52-020	1735/U	CPR112BFC	52-019	1734/U	(8).169 DIA	-
1.122x.497	68/U (A)	GROOVED BUTT	CPR112AGC	52-042	1359/U	CPR112BGC	52-041	1358/U		112GA42
WR137	50/U (B)	FLAT BUTT	CPR137AFC	52-018	1733/U	CPR137BFC	52-017	1732/U	(8).196 DIA	-
1.372x.622	106/U (A)	GROOVED BUTT	CPR137AGC	52-040	1357/U	CPR137BGC	52-039	1356/U		137GA22
WR159	343/U (B)	FLAT BUTT	CPR159AFC	52-016	1731/U	CPR159BFC	52-015	1730/U	(8).257 DIA	
1.590x0.795	344/U (A)	GROOVED BUTT	CPR159AGC	52-038	1355/U	CPR159BGC	52-037	1354/U		159GA12
WR187	49/U (B)	FLAT BUTT	CPR187AFC	52-014	1729/U	CPR187BFC	52-013	1728/U	(8).257 DIA	-
1.872x.872	95/U (A)	GROOVED BUTT	CPR187AGC	52-036	1353/U	CPR187BGC	52-035	1352/U		187GA22
WR229	340/U (B)	FLAT BUTT	CPR229AFC	52-012	1727/U	CPR229BFC	52-011	1726/U	(10).257 DIA	-
2.290x1.145	341/U (A)	GROOVED BUTT	CPR229AGC	52-034	1351/U	CPR229BGC	52-033	1350/U		229GA12
WR284	48/U (B)	FLAT BUTT	CPR284AFC	52-010	1725/U	CPR284BFC	52-009	1724/U	(10).257 DIA	-
2.840x1.340	75/U (A)	GROOVED BUTT	CPR284AGC	52-032	1349/U	CPR284BGC	52-031	1348/U		284GA22
WR340	112/U (B)	GROOVED SLEEVE	CPR340ASC	58-012	554A/U	CPR340BSC	58-011	553A/U	(10).266 DIA	340GA22
3.400x1.700	113/U (A)	FLAT BUTT	CPR340AFC	52-008	1713/U	CPR340BFC	52-007	1712/U	(10).266 DIA	-
		GROOVED BUTT	CPR340AGC	52-030	1347/U	CPR340BGC	52-029	1346/U		340GA12
WR430	104/U (B)	GROOVED SLEEVE	CPR430ASC	58-010	437B/U	CPR430BSC	58-009	435B/U	(10).266DIA	430GA22
4.300x2.150	105/U (A)	FLAT BUTT	CPR430AFC	52-006	1711/U	CPR430BFC	52-005	1716/U	(10).266 DIA	-
		GROOVED BUTT	CPR430AGC	52-028	1345/U	CPR430BGC	52-027	1344/U		430GA12
WR510	337/U (B)	FLAT BUTT	CPR510AFC	52-004	1717/U	CPR510BFC	52-003	1715/U	(10).266 DIA	-
5.100x2.550	338/U (A)	GROOVED BUTT	CPR510AGC	52-026	1719/U	CPR510BGC	52-025	1718/U		510GA12
WR650	69/U (B)	GROOVED SLEEVE	CPR650ASC	58-008	418B/U	CPR650BSC	58-007	417B/U	(10).330 DIA	650GA22
6.500x3.250	103/U (A)	FLAT BUTT	CPR650AFC	52-002	1720/U	CPR650BFC	52-001	1714/U		-
		GROOVED BUTT	CPR650AGC	52-024	1343/U	CPR650BGC	52-023	1362/U		650GA12

Waveguide Size EIA (ID)	Waveguide Size RG (REF)*	Flange Type	Aluminum Model No.	Aluminum MIL F-3922	Aluminum AN No. U/G	Brass Model No.	Brass MIL F-3922	Brass AN No. U/G	Mounting Holes (REF)	Gasket Model No.
CMR Flanges										
WR90	52/U (B)	FLAT SLEEVE	CMR90AST/C	63-008	1483/U	CMR90BST/C	63-004	1478/U	(4).147(4)6- 32	-
.900x.400	67/U (A)									
WR112	51/U (B)	FLAT SLEEVE	CMR112AST/C	63-007	1482/U	CMR112BST/C	63-003	1477/U	(4).147(4)6-32	-
1.122x.497	68/U (A)									
WR137	50/U (B)	FLAT SLEEVE	CMR137AST/C	63-006	1481/U	CMR137BST/C	63-002	1476/U	(4).147(4)6-32	-
1.372x.622	106/U (A)									
WR187	49/U (B)	FLAT SLEEVE	CMR187AST/C	63-005	1480/U	CMR187BST/C	63-001	1475/U	(4).147(4)6-32	-
1.872x.872	95/U (A)									
WR284	48/U (B)	FLAT SLEEVE	CMR284AST/C	64-002	1484/U	CMR284BST/C	64-001	1479/U	(6).173(6)8-32	
2.840x1.340										

Notes: **Waveguide Material: (B)-Brass*
(A)-Aluminum (S)-Silver
CPR = Contact Pressure Rectangular Flange
CMR = Contact Miniature Rectangular Flange

CPR FLANGES

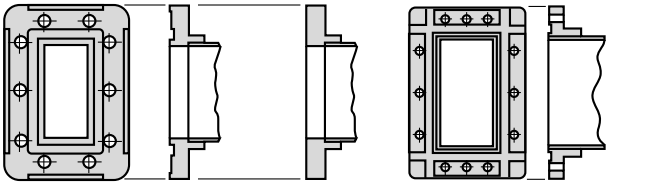

CMR FLANGES

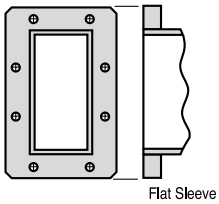

Dual Sidewall Flanges

MDL sidewall flanges are available in a wide variety of waveguide sizes, in aluminum and copper alloys. The dual sidewall flat flanges employ a sleeve type mounting in which the waveguide feeds through the flange completely. The common wall is formed by the component to which the flange is brazed. The choke type flange uses butt type mounting. In addition to the flange models listed, MDL can supply many other hole sizes and drill patterns to meet specific customer's requirements.

							Outside Dimensions			Hole Location Dimensions*						
W/G Size	Common Wall Thickness (inches)	Mounting	Type	Holes Number	Size	MDL Model No.*	Length	Width	Thickness	A	B	C	D	E	F	New Gasket No.
Dual Sidewall Pressurized Flat Flanges*																
WR62	.040	Sleeve	Clear	4	.144 Dia.	62FS132	1.765	1.327	.124			.753			.481	62GA 16
.622-.311			Tap	4	6-32 Thr'd	62FS142	1.735	1.297	.094			.747			.475	
RG91/U			Clear	6	.144 Dia.	62FS152	1.765	1.327	.124	0.00		.753			.481	62GA 16
RG107/U			Tap	6	6-32 Thr'd	62FS162	1.735	1.297	.094	0.00		.747			.475	
WR90	.050	Sleeve	Clear	4	.169 Dia.	90FS132	2.593	1.640	.186			1.088			.643	90GA 16
.900-.400			Tap	4	8-32 Thr'd	90FS142	2.593	1.610	.156			1.082			.637	
RG52/U			Clear	6	.169 Dia.	90FS152	2.593	1.640	.186	0.00		1.088			.643	90GA 16
RG67/U			Tap	6	8-32 Thr'd	90FS162	2.563	1.610	.156	0.00		1.082			.637	
	.120	Sleeve	Clear	4	.169 Dia.	90FS332	2.593	1.640	.186			1.123			.643	90GA 46
			Tap	4	8-32 Thr'd	90FS342	2.563	1.610	.156			1.117			.637	
			Clear	6	.169 Dia.	90FS352	2.593	1.640	.186	0.00		1.123			.643	90GA 46
			Tap	6	8-32 Thr'd	90FS362	2.563	1.610	.156	0.00		1.117			.637	
WR112	.064	Sleeve	Clear	10	.169 Dia.	112FS102	3.233	1.390	.233	0.00	.727		1.449	.364	.543	112GA 16
1.122-.497 RG51/U RG68/U			Tap	10	8-32 Thr'd	112FS112	3.203	1.360	.203	0.00	.721		1.443	.358	.537	
WR137	.074	Sleeve	Clear	10	.199 Dia.	137FS52	3.815	1.625	.237	0.00	.856		1.711	.312	.617	137GA 16
1.372-.622 RG50/U RG106/U			Tap	10	10-24 Thr'd	137FS62	3.785	1.595	.231	0.00	.852		1.707	.310	.615	
WR187	.128	Sleeve	Clear	12	.196 Dia.	187FS52	5.046	2.046	.358	.502	1.502		3.331	.502	.831	187GA16
1.872-.872 RG49/U RG95/U			Tap	12	10-32 Thr'd	187FS62	5.016	2.016	.328	.498	1.498		3.327	.498	.827	
WR284	.160	Sleeve	Clear	12	.261 Dia.	284FS32	7.233	2.733	.358	.752	2.252		3.362	.851	1.112	284GA 16
2.840-1.340 RG48/U RG75/U			Tap	12	1/4-20 Thr'd	284FS42	7.203	2.703	.328	.748	2.248		3.358	.847	8.27	

Notes: **These flange dimensions and models are for reference only.*
Actual groove must be machines on flange face after assembly has been brazed.
Dimensions seperated by a dashed line are min./max.

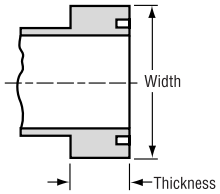

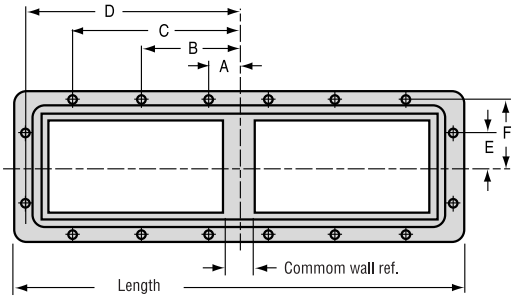

Dual Sidewall Flanges

W/G Size	Common Wall Thickness (inches)	Mounting	Type	Holes Number	Holes Size	MDL Model No.	Outside Dimensions Length	Width	Thickness	Hole Location Dimensions* A	B	C	D	E	F	G	H
Dual Sidewall Flat Flanges																	
WR28	.040	Sleeve	Clear	6	.116 Dia.	28FS12	1.22	.77	.17	0.00		.502			.272	.222	.683
.280-.140			Tap	6	4-40 Thr'd	28FS22	1.18	.73	.13	0.00		.498			.268	.225	.686
RG96/U																	
	.090	Sleeve	Clear	6	.116 Dia.	28FS42	1.22	.77	.17	0.00		.502			.272	.222	.733
			Tap	6	4-40 Thr'd	28FS52	1.18	.73	.13	0.00		.498			.268	.225	.736
			Clear	6	.089 Dia.	28FS62											
WR42	.040	Sleeve	Clear	4	.116 Dia.	42FS12	1.358	.890	.140			.551			.336	.253	.963
.420-.170			Tap	4	4-40 Thr'd	42FS22	1.328	.860	.110			.549			.334	.256	.966
RG53/U	.090	Sleeve	Clear	4	.116 Dia.	42FS32	1.405	.890	.140			.576			.336	.253	1.013
RG121/U			Tap	4	4-40 Thr'd	42FS42	1.375	.860	.110			.574			.334	.256	1.016
RG66/U																	
WR62	.040	Sleeve	Clear	4	.144 Dia.	62FS52	1.765	1.327	.140			.753			.481	.394	1.367
.622-.311			Tap	4	6-32 Thr'd	62FS62	1.735	1.297	.110			.747			.475	.397	1.370
RG91/U			Clear	6	.144 Dia.	62FS72	1.765	1.327	.140	0.00		.753			.481	.394	1.367
RG107/U			Tap	6	6-32 Thr'd	62FS82	1.735	1.297	.110	0.00		.747			.475	.397	1.370
	.090	Sleeve	Clear	4	.144 Dia.	62FS92	1.765	1.327	.140			.753			.481	.394	1.417
			Tap	4	6-32 Thr'd	62FS102	1.735	1.297	.110			.747			.475	.397	1.420
			Clear	6	.144 Dia.	62FS112	1.765	1.327	.140	0.00		.753			.481	.394	1.417
			Tap	6	6-32 Thr'd	62FS122	1.735	1.297	.110	0.00		.747			.475	.397	1.420
WR90	.050	Sleeve	Clear	4	.169 Dia.	90FS52	2.593	1.640	.186			1.088			.643	.503	1.953
.900-.400			Tap	4	8-32 Thr'd	90FS62	2.563	1.610	.156			1.088			.637	.506	1.956
RG52/U			Clear	6	.169 Dia.	90FS72	2.593	1.640	.186	0.00		1.088			.643	.503	1.953
RG67/U			Tap	6	8-32 Thr'd	90FS82	2.563	1.610	.156	0.00		1.088			.637	.506	1.956
	.120	Sleeve	Clear	4	.169 Dia.	90FS92	2.593	1.640	.186			1.123			.643	.503	2.023
			Tap	4	8-32 Thr'd	90FS102	2.563	1.610	.156			1.117			.637	.506	2.026
			Clear	6	.169 Dia.	90FS112	2.593	1.640	.186	0.00		1.123			.643	.503	2.023
			Tap	6	8-32 Thr'd	90FS122	2.563	1.610	.156	0.00		1.117			.637	.506	2.026
WR112	.064	Sleeve	Clear	10	.169 Dia.	112FS62	3.233	1.390	.265	0.00	.727		1.449	.364	.543	.628	2.439
1.122-.497			Tap	10	8-32 Thr'd	112FS72	3.203	1.360	.235	0.00	.721		1.443	.358	.537	.631	2.442
RG51/U	.150	Sleeve	Clear	10	.169 Dia.	112FS82	3.233	1.390	.265	0.00	.727		1.449	.364	.543	.628	2.525
RG68/U			Tap	10	8-32 Thr'd	112FS92	3.203	1.360	.235	0.00	.721		1.443	.358	.537	.631	2.528
WR137	.074	Sleeve	Clear	10	.199 Dia.	137FS12	3.815	1.625	.265	0.00	.856		1.711	.312	.617	.754	2.951
1.372-.622			Tap	10	10-24 Thr'd	137FS22	3.785	1.595	.235	0.00	.852		1.707	.310	.615	.757	2.954
RG50/U	.150	Sleeve	Clear	10	.199 Dia.	137FS32	3.815	1.625	.265	0.00	.856		1.711	.312	.617	.754	3.028
RG106/U			Tap	10	10-24 Thr'd	137FS42	3.785	1.595	.235	0.00	.852		1.707	.310	.615	.757	3.031
WR187	.128	Sleeve	Clear	12	.196 Dia.	187FS12	5.046	2.046	.390	.502	1.502		2.331	.502	.831	1.005	4.008
1.872-.872			Tap	12	10-32 Thr'd	187FS22	5.016	2.016	.360	.498	1.498		2.327	.498	.827	1.008	4.011
RG49/U	.150	Sleeve	Clear	12	.196 Dia.	187FS32	5.046	2.046	.390	.502	1.502		2.331	.502	.831	1.005	4.029
RG95/U			Tap	12	10-32 Thr'd	187FS42	5.016	2.016	.360	.498	1.498		2.327	.498	.827	1.008	4.032
WR284		Sleeve	Clear	12	.261 Dia.	284FS12	7.233	2.733	.390	.752	2.252		3.362	.851	1.112	1.505	6.010
2.840-1.340	.160	Tap	12	1/4-20 Thr'd		284FS22	7.203	2.703	.360	.748	2.248		3.358	.847	1.108	1.510	6.015
RG48/U																	
RG75/U																	

Notes: **These flange dimensions and models are for reference only.*
Actual groove must be machines on flange face after assembly has been brazed.
Dimensions seperated by a dashed line are min./max.

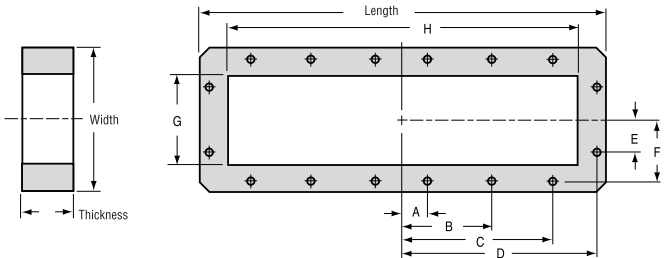

Dual Sidewall Flanges

W/G Size	Common Wall Thickness (inches)	Mounting	Type	Holes Number	Size	MDL Model No.*	Outside Dimensions Length	Width	Thickness	Hole Location Dimensions* A	B	C	Gasket No.
Dual Sidewall Choke Flanges													
WR42	.040	Butt	Clear	4	.116 Dia.	42FS 70	1.390	1.015	.163	.392	.502		
.420-.170			Tap	4	4-40 Thr'd	42FS 80	1.360	.985	.157	.388	.498		
RG53/U													
RG121/U													
RG66/U													
WR62	.040	Butt	Clear	6	.144 Dia.	62FS 32	1.765	1.327	.253	.480	.752	.480	
.622-.311			Tap	6	6-32 Thr'd	62FS 42	1.735	1.297	.247	.476	.748	.476	
RG91/U													
RG107/U													
WR90	.050	Butt	Clear	6	.169 Dia.	90FS 32	2.608	1.640	.315	.642	1.087	.642	
.900-.400			Tap	6	8-32 Thr'd	90FS 42	2.578	1.610	.309	.638	1.083	.638	
RG52/U													
RG67/U													
WR112	.064	Butt	Clear	6	.169 Dia.	112FS 42	3.077	1.890	.440	.739	1.271	.807	
1.122-.497			Tap	6	8-32 Thr'd	112FS 52	3.047	1.860	.434	.735	1.267	.803	
RG51/U													
RG68/U													

W/G Size	Common Wall Thickness (inches)	Mounting	Type	Holes Number	Size	MDL Model No.*	Outside Dimensions Length	Width	Thickness	Hole Location Dimensions* A	B	C	Gasket No.
Dual Sidewall Pressurized Choke Flanges													
WR42	.040	Butt	Clear	4	.116 Dia.	42FS10	1.390	1.015	.163	.392	.502		42GA1T
.420-.170			Tap	4	4-40 Thr'd	42FS20	1.360	.985	.157	.388	.498		
RG53/U			Clear	4	.116 Dia.	42FS30	1.358	.890	.163	.336	.551		42GA12
RG121/U			Tap	4	4-40 Thr'd	42FS40	1.328	.860	.157	.334	.549		
RG66/U	.090	Butt	Clear	4	.116 Dia.	42FS50	1.405	.890	.163	.336	.576		42GA22
			Tap	4	4-40 Thr'd	42FS60	1.375	.860	.157	.334	.574		
WR62	.040	Butt	Clear	4	.144 Dia.	62FS12	1.765	1.327	.253	.480	.752		62GA12
.622-.311			Tap	4	6-32 Thr'd	62FS22	1.735	1.297	.247	.476	.748		
RG91/U													
RG107/U													
WR90	.050	Butt	Clear	4	.169 Dia.	90FS12	2.608	1.640	.315	.642	1.087		90GA12
.900-.400			Tap	4	8-32 Thr'd	90FS22	2.578	1.610	.309	.638	1.083		
RG52/U													
RG67/U													
WR112	.064	Butt	Clear	6	.169 Dia.	112FS22	3.077	1.890	.440	.739	1.271	.807	112GA12
1.112-.497			Tap	6	8-32 Thr'd	112FS32	3.047	1.860	.434	.735	1.267	.803	
RG51/U	.150	Butt	Tap	6	8-32 Thr'd	112FS12	3.218	1.890	.443	.739	1.314	.807	112GA22
RG68/U							3.188	1.860	.433	.735	1.310	.803	

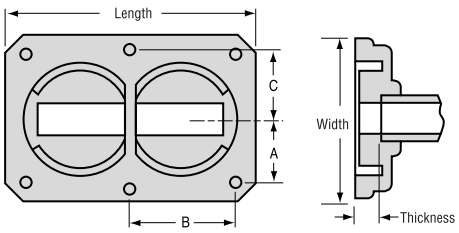

SIDEWALL CHOKE FLANGE

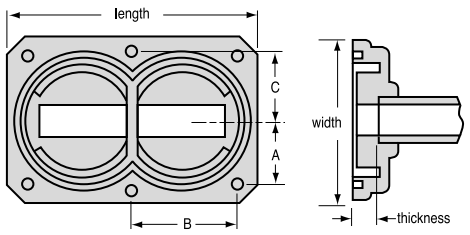

SIDEWALL PRESSURIZED CHOKE FLANGE

Notes: **Dimensions seperated by a dashed line are min./max.*

Reference

Reference Table of Rigid Rectangular Waveguide Data and Fittings

Designation IEC R	Designation EIA WR	Recommended Operating Frequency Range For TE_{01} Mode IEC (GHz) 1.25fc 1.9fc	Recommended Operating Frequency Range For TE_{01} Mode EIA (GHz)	Cut Off For TE_{01} Mode Frequency (GHz)	Cut Off For TE_{01} Mode Wavelength (cm)	Power Rating (megawatts) (see note 1) 1.25fc 1.9fc	Theoretical Attenuation Lowest to Highest Frequency (dB/100ft.)	JAN WG RG	Material Alloy	JAN FLANGE Choke UG /U	JAN FLANGE Cover UG /U	EIA WG WR	Dimensions (inches) Inside	Tol. (±)	Outside	Tol. (±)	Wall Thickness (nom.)
	3	2300	0.32-0.49	0.32-0.49	0.256	116.84	246-348	.040-.027	290	Alum.			2300	23.000-11.500	0.020	23.376-11.876	.020	0.188
	4	2100	0.35-0.53	0.35-0.53	0.281	106.68	205-290	.046-.031	291	Alum.			2100	21.000-10.500	0.020	21.376-10.876	.020	0.188
	5	1800	0.41-0.62	0.41-0.62	0.328	91.44	150-213	.058-.039	201	Alum.			1800	18.000-9.000	0.020	18.250-9.250	.020	0.125
	6	1500	0.49-0.75	0.49-0.75	0.393	76.20	104-148	.076-.051	202	Alum.			1500	15.000-7.500	0.015	15.350-7.750	.015	0.125
	8	1150	0.64-0.98	0.64-0.96	0.513	58.40	61.5-87.1	.113-.076	203	Alum.			1150	11.500-5.750	0.015	11.750-6.000	.015	0.125
	9	975	0.76-1.15	0.75-1.12	0.605	49.53	44.2-62.6	.145-.098	204	Alum.			975	9.750-4.875	0.010	10.000-5.125	.010	0.125
	12	770	0.96-1.46	0.96-1.45	0.766	39.12	27.6-39.1	.206-.140	205	Alum.			770	7.700-3.850	0.010	7.950-4.100	.010	0.125
L	14	650	1.14-1.73	1.12-1.70	0.908	33.02	19.6-27.8	.317-.214 .266-.180	69 103	Brass Alum.		417A* 417B*	650	6.500-3.250	0.010	6.660-3.410	.010	0.080
	18	510	1.45-2.20	1.45-2.20	1.157	25.91	12.09-17.1	.456-.309 .382-.259	337 338	Brass Alum.			510	5.100-2.550	0.010	5.260-2.710	.010	0.080
W	22	430	1.72-2.61	1.70-2.60	1.372	21.84	8.6-12.2	.588-.399 .494-.334	104 105	Brass Alum.		435A* 437A*	430	4.300-2.150	0.008	4.460-2.310	.008	0.080
	26	340	2.17-3.30	2.20-3.30	1.736	17.27	5.4-7.6	.837-.567 .702-.475	112 113	Brass Alum.		553* 554*	340	3.400-1.700	0.005	3.560-1.860	.005	0.080
S	32	284	2.60-3.95	2.60-3.95	2.078	14.43	3.5-5.0	1.136-.777 .953-.652	48 75	Brass Alum.	54B 585A	53 584	284	2.840-1.340	0.005	3.000-1.500	.005	0.080
	40	229	3.22-4.90	3.30-4.90	2.577	11.63	2.44-3.46	1.514-1.026 1.270-.860	340 341	Brass Alum.			229	2.290-1.145	0.005	2.418-1.273	.005	0.064
C	48	187	3.94-5.99	3.95-5.85	3.152	9.510	1.52-2.15	2.140-1.467 1.795-1.231	49 95	Brass Alum.	148C 406D	149A 407	187	1.872-0.872	0.005	2.000-1.000	.005	0.064
	58	159	4.64-7.05	4.90-7.05	3.711	8.078	1.17-1.66	2.617-1.773 2.195-1.487	343 344	Brass Alum.			159	1.590-0.795	0.004	1.718-0.923	.004	0.064
	70	137	5.38-8.17	5.85-8.20	4.301	6.970	0.79-1.12	3.470-2.390 2.910-2.004	50 106	Brass Alum.	343B 440B	344 441	137	1.372-0.622	0.04	1.500-0.750	.004	0.064
X_L	84	112	6.58-10.00	7.05-10.00	5.259	5.700	0.52-0.73	4.761-3.292 3.993-2.761	51 68	Brass Alum.	52B 137B	51 138	112	1.122-0.497	0.004	1.250-0.625	.004	0.064
		102	(7.23)-(11.0)	7.00-11.0	5.785	5.182	0.48-0.68	5.093-3.450 4.272-2.894	320	Brass Alum.	1494	1493	102	1.020-0.510	0.003	1.148-0.638	.003	0.064
X_S	100	90	8.20-12.5	8.20-12.40	6.557	4.572	0.33-0.47	6.614-4.570 5.547-3.833	52 67	Brass Alum.	40B 136B	39 135	90	0.900-0.400	0.003	1.000-0.500	0.003	0.050
	120	75	9.84-15.0	10.00-15.00	7.868	3.810	0.26-0.34	8.078-5.472 6.775-4.590	346 347	Brass Alum.			75	0.750-0.375	0.003	0.850-0.475	0.003	0.050
K_U	140	62	11.9-18.0	12.4-18.0	9.486	3.160	0.18-0.25	10.696-7.246 8.971-6.077 6.762-4.581	91 349 107	Brass Alum. Silver	541A	419	62	0.622-0.311	0.002	0.702-0.391	0.003	0.040
	180	51	14.5-22.0	15.0-22.0	11.574	2.590	0.12-0.17	14.406-9.759 12.082-8.185	352 351	Brass Alum.			51	0.510-0.255	0.0025	0.590-0.335	0.003	0.040
K	220	42	17.6-26.7	18.0-26.5	14.047	2.137	0.066-0.094	22.042-15.464 18.487-12.970 13.936-9.778	53 121 66	Brass Alum. Silver	596A 598A	595 597	42	0.420-0.170	0.0020	0.500-0.250	0.003	0.040
	260	34	21.7-33.0	22.0-33.0	17.328	1.730	0.053-0.076	26.465-17.928 22.197-15.036	354 355	Brass Alum.			34	0.340-0.170	0.0020	0.420-0.250	0.003	0.040
K_A	320	28	26.4-40.1	26.5-40.0	21.08	1.422	0.036-0.051	35.413-23.989 29.701-20.120 22.391-15.168	271 96	Brass Alum. Silver	600A	599	28	0.280-0.140	0.0015	0.360-0.220	0.220	0.040
Q	400	22	33.0-50.1	33.0-50.0	26.34	1.138	0.023-0.033	49.491-33.526 41.508-28.119 31.292-21.198	272 97	Brass Alum. Silver		383	22	0.224-0.112	0.0010	0.304-0.192	0.002	0.040
	500	19	39.3-59.7	40.0-60.0	31.36	0.956	0.016-0.023	64.367-43.603 40.697-27.569	358	Brass Silver		1529*	19	0.188-0.094	0.0010	0.268-0.174	0.002	0.040
V	620	15	49.9-75.8	50.0-75.0	39.86	0.752	0.010-0.144	92.152-62.425 58.265-39.470	273 98	Brass Silver		385	15	0.148-0.074	0.0010	0.228-0.154	0.002	0.040
	740	12	60.5-92.0	60.0-90.0	48.35	0.620	0.0069-0.0098	123.128-83.409 77.85-52.737	274 99	Brass Silver		387	12	0.122-0.061	0.0005	0.202-0.141	0.002	0.040
	900	10	73.8-112	75-110.0	59.01	0.508	0.0046-0.0066	165.920-112.397 104.906-71.065	359	Brass Silver		1528*	10	0.100-0.050	0.0005	0.180-0.130	0.002	0.040
	1200	8	92.3-140	90.0-140.0	73.6	0.406	0.0030-0.0042	146.611-99.317	278	Silver		1527*	8	0.0800-0.0400	0.0003	0.120-0.080	0.001	0.020
	1400	7	113-173	110.0-170.0	90.9	0.330	0.0019-0.0028	200.185-135.609	276	Silver		1525*	7	0.0650-0.0325	0.00025	0.105-0.073	0.001	0.020
	1800	5	145-220	140.00-220.0	115.7	0.259	0.0012-0.0017	288.036-195.120	275	Silver		1524*	5	0.0510-0.0255	0.00025	0.091-0.066	0.001	0.020
	2200	4	172-261	170.0-260.0	137.3	0.218	0.00086-0.00122	372.048-252.032	277	Silver		1526*	4	0.0430-0.0215	0.00020	0.083-0.062	0.001	0.020
	2600	3	220-335	220.0-325.0	176.2	0.170	0.00054-0.00076	529.155-358.459		Silver			3	0.0340-0.0170	0.00020	0.156 dia	0.001	

Notes: [1] *True theoretical values at 1 atmos. Dry air at 20°C, no safety factor included.*
* *Contact Flange*

Waveguide Tubing

Designations Frequency GHz		Waveguide Type			Inner Dimensions Inches (mm)		Outer Dimensions Inches (mm)		Tolerance Inner Dimensions Inches (mm)		Wall Thickness Nominal	Approx. Weight Pounds Per Foot (oz)
EIA	IEC	Material	MIL-W-85C	MIL W-85/X Dash No.	A_1	B_1	A_2	B_2	STD	PREC		
WR28	R320	Coin Silver	RG-96/U	3-006	.280	.140	.360	.220	.0015	.0008	.040	2.64
26.5-40.0	26.4-40.1	Copper Alloy	RG-271/U	3-008	(7.11)	(3.56)	(9.14)	(5.59)	(.038)	(.020)	(1.02)	2.64
		6061AL		3-009								.050
WR42	R220	Coin Silver	RG-63/U	1-106	.420	.170	.500	.250	.002	.001	.040	3.537
18.0-26.5	17.6-26.7	OF-		1-100	(10.67)	(4.32)	(12.70)	(6.35)	(.05)	(.025)	(1.02)	.2017
		Copper Alloy	RG-53/U	1-102								.205
		1100 AL	RG-121/U	1-103								.0627
		6061 AL		1-104								.0627
		6063 AL		1-182								.0627
WR51	R180	OF-	RG-352/U	1-094	.510	.255	.590	.335	.0025	.001	.040	.262
15.0-22.0	14.5-22.0	Copper Alloy	RG-353/U	1-096	(12.95)	(6.48)	(14.99)	(8.51)	(.063)	(.025)	(1.02)	.259
		1100 AL	RG-351/U	1-097								.079
		6061 AL		1-098								.079
		6063 AL		1-181								.079
WR62	R140	OF-		1-087	.622	.311	.702	.391	.0025	.001	.040	.314
12.4-18.0	11.9-18.0	Copper Alloy	RG-91/U	1-089	(15.80)	(7.90)	(17.83)	(9.93)	(.063)	(.025)	(1.02)	.311
		1100 AL	RG-349/U	1-090								.0948
		6061 AL		1-091								.0948
		6063 AL		1-180								.0948
WR75	R120	OF-		1-081	.750	.375	.850	.475	.003	.001	.050	.475
10.0-15.0	9.84-15.0	Copper Alloy	RG-346/U	1-085	(19.05)	(9.53)	(21.59)	(12.07)	(.08)	(.025)	(1.27)	.470
		1100 AL	RG-347/U	1-083								.143
		6061 AL		1-084								.143
		6063 AL		1-179								.143
WR90	R100	OF-		1-075	.900	.400	1.000	.500	.004	.001	.050	.543
8.2-12.4	8.2-12.5	Copper Alloy	RG-52/U	1-079	(22.86)	(10.16)	(25.40)	(12.70)	(.10)	(.025)	(1.27)	.537
		1100 AL	RG-67/U	1-077								.1638
		6061 AL		1-078								.1638
		6063 AL		1-178								.1638
	Hvy Wall	OF-		2-008	.900	.400	1.100	.600	.004	.001	.100	1.086
	Hvy Wall	OF-		2-009	.900	.400	1.300	.800	.004	.001	.200	2.172
	Hvy Wall	Alum*			.900	.400	1.100	.600	.004	.001	.100	.3276
	Hvy Wall	Alum*			.900	.400	1.300	.800	.004	.001	.200	.6552
	Nar Hgt	*+			.900	.200	1.000	.300	.004	.001	.050	1.38
WR102		OF-		1-156	1.020	.510	1.148	.638	.003	.002	.064	1.20
7.05-11.0		Copper Alloy	RG-320/U	1-155	(25.91)	(12.95)	(29.16)	(16.21)	(.08)	(.05)	(1.63)	1.15
		1100 AL		1-157								.330
		6061 AL		1-158								.330
		6063 AL		1-160								.330

Waveguide Tubing

Designations Frequency GHz		Waveguide Type			Inner Dimensions Inches (mm)		Outer Dimensions Inches (mm)		Tolerance Inner Dimensions Inches (mm)		Wall Thickness Nominal	Approx. Weight Pounds Per Foot (oz)
EIA	IEC	Material	MIL-W-85C	MIL W-85/X Dash No.	A_1	B_1	A_2	B_2	STD	PREC		
WR112	R84	OF-		1-069	1.122	.497	1.250	.625	.004	.002	.064	.867
7.05-10.0	6.58-10.0	Copper Alloy	RG-51/U	1-073	(28.50)	(12.62)	(31.75)	(15.88)	(.10)	(.05)	(1.63)	.858
		1100 AL	RG-68/U	1-071								.260
		6061 AL		1-072								.260
		6063 AL		1-177								.260
	Hvy Wall	OF-		2-007	1.122	.497	1.378	.753	.004	.002	.128	1.734
	Hvy Wall	Alum*			1.122	.497	1.378	.753	.004	.002	.128	.52
	Nar Hgt	*+			1.122	.248	1.250	.376	.004	.002	.064	
WR137	R70	OF-		1-063	1.372	.622	1.500	.750	.004	.002	.064	1.06
5.85-8.20	5.38-8.17	Copper Alloy	RG-50/U	1-067	(34.85)	(15.80)	(38.10)	(19.05)	(.10)	(.05)	(1.63)	1.03
		1100 AL	RG-106/U	1-065								.33
		6061 AL		1-066								.33
		6063 AL		1-176								.33
	Nar Hgt	*+			1.372	.311	1.500	.439	.004	.002	.064	
WR159	R58	OF-		1-057	1.590	.795	1.718	.923	.005	.002	.064	1.248
4.90-7.05	4.64-7.05	Copper Alloy	RG-343/U	1-061	(40.39)	(20.19)	(43.64)	(23.44)	(.13)	(.05)	(1.63)	1.235
		1100 AL	RG-344/U	1-059								.376
		6061 AL		1-060								.376
		6063 AL		1-175								.376
	Nar Hgt	*+			1.590	.397	1.718	.525	.005	.002	.064	
WR187	R48	OF-		1-051	1.872	.872	2.000	1.000	.005	.003	.064	1.426
3.95-5.85	3.94-5.99	Copper Alloy	RG-49/U	1-055	(47.55)	(22.15)	(50.80)	(25.40)	(.13)	(.08)	(1.63)	1.411
		1100 AL	RG-95/U	1-053								.43
		6061 AL		1-054								.43
		6063 AL		1-174								.43
	Hvy Wall	OF-		2-006	1.872	.872	2.122	1.122	.005	.003	.125	2.84
	Hvy Wall	1100 AL		2-003	1.872	.872	2.172	1.172	.005	.003	.150	1.00
	Hvy Wall	6063 AL		2-005	1.872	.872	2.172	1.172	.005	.003	.150	1.00
	Nar Hgt	*+			1.872	.436	2.000	.564	.005	.003	.064	
WR229	R40	OF-		1-045	2.290	1.145	2.418	1.273	.006	.003	.064	1.769
3.30-4.90	3.22-4.90	Copper Alloy	RG-340/U	1-049	(58.17)	(29.08)	(61.42)	(32.33)	(.15)	(.08)	(1.63)	1.751
		1100 AL	RG-341/U	1-047								.533
		6061 AL		1-048								.533
		6063 AL		1-173								.533
	Nar Hgt	*+			2.290	.572	2.418	.700	.006	.003	.064	
WR284	R32	OF-		1-039	2.840	1.340	3.000	1.500	.006	.004	.080	2.694
2.60-3.95	2.60-3.95	Copper Alloy	RG-48/U	1-043	(72.14)	(34.04)	(76.20)	(38.10)	(.15)	(.10)	(2.03)	2.666
		1100 AL	RG-75/U	1-041								.812
		6061 AL		1-042								.812
		6063 AL		1-172								.812
		1100 AL		2-001	2.840	1.340	3.238	1.738	.006	.004	.199	2.03
		6061 AL	RG-375U	2-002	(72.14)	(34.04)	(82.25)	(44.15)	(.15)	(.10)	(5.05)	2.03
		6063 AL		2-004								2.03
	Nar Hgt	*+			2.840	.670	3.000	.830	.006	.004	.080	
					2.840	.400	3.000	.560	.006	.004	.080	

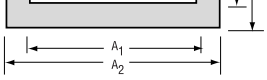

Notes: *Specify Material Required
+ Other Heights Available On Request